J. Basic. Appl. Sci. Res., 1(12)2817-2822, 2011
© 2011, TextRoad Publication
ISSN 2090-4304
Journal of Basic and Applied Scientific Research
www.textroad.com

Two-Area Load Frequency Control Using IP Controller Tuned Based on Tabu Search

Babak Keyvani Boroujeni, Hasan Fayazi Boroujeni*, Meysam Eghtedari, Elahe Behzadipour, Ahmad Memaripour

Department of Electrical Engineering, Boroujen Branch, Islamic Azad University, Boroujen, Iran

ABSTRACT

In this paper an optimal load frequency controller for two area interconnected power system is presented to quench the deviations in frequency and tie line power due to different load disturbances. In classical LFC problems, PI type controllers are used to control of system. But due to some disadvantages of the PI type controllers, the researchers are toward finding a better control scheme. Although many different advanced method have been carried out to LFC problem, but the industries are willing to use simple PI controllers. In this scope, this paper presents IP type controller for LFC problem. The parameters of the proposed IP controller are tuned using Tabu Search (TS) method. A two-area electric power system with a wide range of parametric uncertainties is given to illustrate the proposed method. To show effectiveness of the proposed method and also comparison purposes, a PI type controller optimized by TS is also designed. The simulation results visibly show the validity of IP controller in comparison with PI controller.

KEY WORDS: Load Frequency Control, Two Area Electric Power System, Tabu Search, IP Controller.

1. INTRODUCTION

For large scale electric power systems with interconnected areas, Load Frequency Control (LFC) is important to keep the system frequency and the inter-area tie power as near to the scheduled values as possible. The input mechanical power to the generators is used to control the frequency of output electrical power and to maintain the power exchange between the areas as scheduled. A well designed and operated power system must cope with changes in the load and with system disturbances, and it should provide acceptable high level of power quality while maintaining both voltage and frequency within tolerable limits.

Many control strategies for Load Frequency Control in electric power systems have been proposed by researchers over the past decades. This extensive research is due to fact that LFC constitutes an important function of power system operation where the main objective is to regulate the output power of each generator at prescribed levels while keeping the frequency fluctuations within pre-specifies limits. A unified tuning of PID load frequency controller for power systems via internal mode control has been proposed [1]. In this paper the tuning method is based on the two-degree-of-freedom (TDF) internal model control (IMC) design method and a PID approximation procedure. A new discrete-time sliding mode controller for load-frequency control in areas control of a power system has been presented [2]. In this paper full-state feedback is applied for LFC not only in control areas with thermal power plants but also in control areas with hydro power plants, in spite of their non minimum phase behaviors. To enable full-state feedback, a state estimation method based on fast sampling of measured output variables has been applied. The applications of artificial neural network, genetic algorithms and optimal control to LFC have been reported [3, 4, 5]. An adaptive decentralized load frequency control of multi-area power systems has been presented [6]. Also the application of robust control methods for load frequency control problem has been presented [7, 8].

This paper deals with a design method for LFC in a multi area electric power system using IP type controller whose parameters are tuned using TS. In order to show effectiveness of the proposed method, this IP controller is compared with a PI type controller whose parameters are tuned using TS. Simulation results show that the IP controller guarantees robust performance under a wide range of operating conditions and system uncertainties.

***Corresponding Author:** Hasan Fayazi Boroujeni, Department of Electrical Engineering, boroujen branch, Islamic Azad University, boroujen, Iran, P. O. Box 88715/141 Office: +983824223812 Fax: +983824223812 Email: hasanfayaziboroujeni@gmail.com

2. Plant model

Fig. 1 shows a two-control area power system which is considered as a test system. The state-space model of the system is as (1) [9].

$$\begin{cases} \dot{x} = Ax + Bu \\ y = Cx \end{cases} \tag{1}$$

Where:

$u = [\Delta P_{D1}, \Delta P_{D2}, U_1, U_2]$

$y = [y_1, y_2] = [\Delta f_1, \Delta f_2, \Delta P_{tie}]$

$x = [\Delta P_{G1} \quad \Delta P_{T1} \quad \Delta f_1 \quad \Delta P_{tie} \quad \Delta P_{G2} \quad \Delta P_{T2} \quad \Delta f_2]$

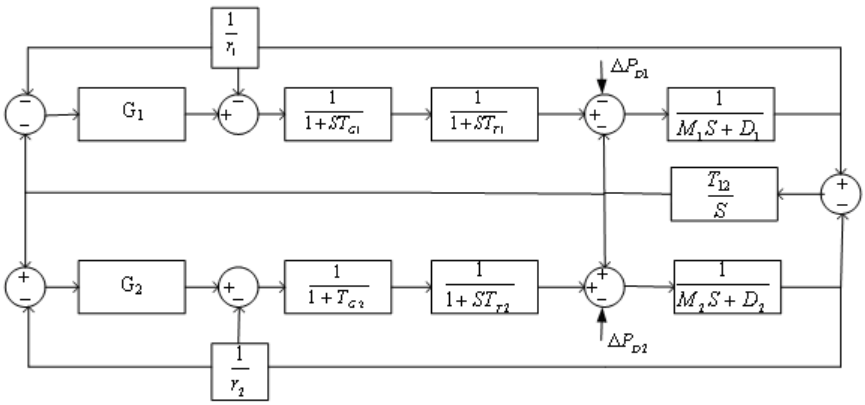

Fig. 1. Two-area electric power system for LFC studies

$$A=\begin{bmatrix} \frac{-1}{T_{G1}} & 0 & \frac{-1}{r_1 T_{G1}} & 0 & 0 & 0 & 0 \\ \frac{1}{T_{T1}} & \frac{-1}{T_{T1}} & 0 & 0 & 0 & 0 & 0 \\ 0 & \frac{1}{M_1} & \frac{-D_1}{M_1} & \frac{-1}{M_1} & 0 & 0 & 0 \\ 0 & 0 & T_{12} & 0 & 0 & 0 & -T_{12} \\ 0 & 0 & 0 & 0 & \frac{-1}{T_{G2}} & 0 & \frac{-1}{r_2 T_{G2}} \\ 0 & 0 & 0 & 0 & \frac{1}{T_{T2}} & \frac{-1}{T_{T2}} & \\ 0 & 0 & 0 & \frac{1}{M_2} & 0 & \frac{1}{M_2} & \frac{-D_2}{M_2} \end{bmatrix} \quad B=\begin{bmatrix} 0 & 0 & \frac{1}{M_1} & 0 & 0 & 0 & 0 \\ 0 & 0 & 0 & 0 & 0 & 0 & \frac{1}{M_2} \\ \frac{1}{T_{G1}} & 0 & 0 & 0 & 0 & 0 & 0 \\ 0 & 0 & 0 & 0 & \frac{1}{T_{G2}} & 0 & 0 \end{bmatrix}$$

The parameters of model, defined as follow:

Δ: Deviation from nominal value

M=2H: Constant of inertia

D: Damping constant

R: Gain of speed droop feedback loop

T_t: Turbine Time constant

T_G: Governor Time constant

G_1: First area controller

G_2: Second area controller

The typical values of system parameters for nominal operation condition are as follow:

$T_{T1} = T_{T2} = 0.03$ $\quad T_{G1} = T_{G2} = 0.08$
$T_{P1} = T_{P2} = 20$ $\quad R_1 = R_2 = 2.4$
$K_{P1} = K_{P2} = 120$ $\quad B_1 = B_2 = 0.425$
$K_1 = K_2 = 1; a_{12} = -1$ $\quad T_{12} = 0.545$

Where, the footnote 1 indicates first area parameters and footnote 2 indicates second area parameters and the parameters of two areas are considered equal.

The objectives are Design G_1 and G_2 in Load Frequency Control (LFC). As referred before, many methods have been carried out to design these controllers so far. In this paper IP type controller is considered to control of system. A Meta heuristic optimization method named TS is used to tuning the proposed controllers. The goals are study the ability of IP controller in Load Frequency Control (LFC) problem and also comparing the performances of IP and PI controllers. In the next section, the proposed IP controller is developed.

3. IP controller

As referred before, in this paper IP type controllers are considered for LFC problem. Fig. 2 shows the structure of IP controller. It has some clear differences with PI controller. In the case of IP regulator, at the step input, the output of the regulator varies slowly and its magnitude is smaller than the magnitude of PI regulator at the same step input [10]. Also as shown in Fig. 3, If the outputs of the both regulators are limited as the same value by physical constraints, then compared to the bandwidth of PI regulator the bandwidth of IP regulator can be extended without the saturation of the regulator output [10].

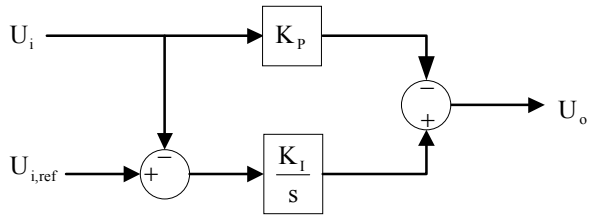

Fig. 2. Structure of the IP controller

4. Design methodology

The proposed IP controller performance is evaluated on the proposed test system given in section 2. The parameters of the IP controllers are obtained using TS. In the next subsection a brief introduction about TS is presented.

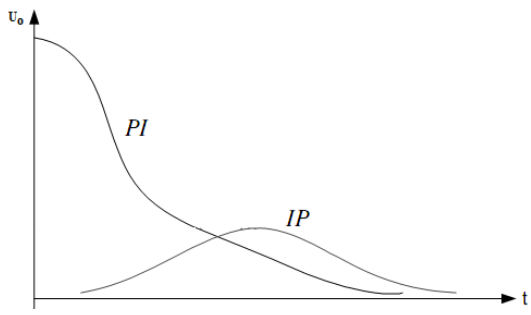

Fig. 3. Output of IP and PI regulators with the same damping coefficient ($\xi = 1$) and the same band width at the same step input signal command

4.1. Tabu search

Tabu search (TS) was first presented in its present form by Glover [11, 12]. Many computational experiments have shown that TS has now become an established optimization technique which can compete with almost all known techniques and which - by its flexibility - can beat many classical procedures. Up to now, there is no formal explanation of this good behavior. Recently, theoretical aspects of TS have been investigated [13].

The success with TS implies often that a serious effort of modeling be done from the beginning. In TS, iterative procedure plays an important role: for most optimization problems no procedure is known in general to get directly an "optimal" solution.

The general step of an iterative procedure consists in constructing from a current solution x_i a next solution x_j *and* in checking whether one should stop there or perform another step.

In other hand, a neighborhood $N(x_i)$ is defined for each feasible solution x_i, and the next solution x_j is searched among the solutions in $N(x_j)$.

In this part we summarize the discrete TS algorithm in four steps. Assume that X is a total search space and x is a solution point sample and f (x) is cost function:

1- Choose x $\in$ X to start the process.

2- Create a candidate list of non-Tabu moves in neighborhood. (x_i, i=1,2,...,N)

3-Find $x_{winner} \in N(x)$ such that $f(x_{winner}) < f(x_i)$, $i \neq winner$.

4- Check the stopping criterion. If satisfied, exit the algorithm.

If not, winner $x = x_{winner}$, update Tabu List and then go to step 2.

In order to exit from algorithm, there are several criterions that are considered in our research.

1- by determining a predetermined threshold: If the value of cost function was less, algorithm would be terminated.

2- Determination of specific number of iterations.

3- If the value of the cost was remained invariable or negligible change for several iterations, algorithm would be terminated.

A didactic presentation of TS and a series of applications have been collected in [11, 12].

4.2. IP controller adjustment using TS

In this section the parameters of the proposed IP controllers are tuned using TS. In optimization methods, the first step is to define a performance index for optimal search. In this study the performance index is considered as (2). In fact, the performance index is the Integral of the Time multiplied Absolute value of the Error (*ITAE*).

$$ITAE = \int_0^t t|\Delta\omega_1|dt + \int_0^t t|\Delta\omega_2|dt \tag{2}$$

It is clear to understand that the controller with lower ITAE is better than the other controllers. To compute the optimum parameter values, a 10 % step change in ΔP_{D1} is assumed and the performance index is minimized using TS. It should be noted that TS algorithm is run several times and then optimal set of parameters is selected. The optimum values of the IP parameters are obtained using TS and summarized in the Table 1.

Table 1 - Optimum values of K_P and K_I for IP controllers

	K_P	K_I
First area IP parameters	3.5631	7.1527
Second area IP parameters	1.9513	8.6742

In order to comparison and show effectiveness of the proposed method, PI type controller optimized by TS is incorporated for LFC. The optimum value of the PI controllers Parameters are obtained and summarized in the Table 2.

Table 2 - Optimum values of K_P and K_I for PI controllers

	K_P	K_I
First area PI parameters	2.0510	5.1139
Second area PI parameters	3.2362	4.7327

5. RESULTS AND DISCUSSIONS

The results are carried out on the multi area test system with the proposed IP and PI controllers. Three operating conditions are considered for simulation as follows:

i. Nominal operating condition

ii. Heavy operating condition (20% changing parameters from their typical values)

iii. Very heavy operating condition (40% changing parameters from their typical values)

In order to demonstrate the robustness of the proposed method, The *ITAE* is calculated following step change in the demand of first area (ΔP_{D1}) at all operating conditions (Nominal, Heavy and Very heavy) and results are listed at Table 3. Following step change, the IP controller has better performance than the PI controller at all operating conditions.

Fig. 4 shows $\Delta\omega_1$ at nominal, heavy and very heavy operating conditions following 10 % step change in the demand of first area (ΔP_{D1}). Each figure contains two plots as solid line for IP controller and dashed line for PI controller. It is seen that the IP controller has better performance than the other method at all operating conditions.

Table 3 – 10% Step increase in demand of first area (ΔP_{D1})

	The calculated ITAE	
	IP	**PI**
Nominal operating condition	0.0263	**0.0342**
Heavy operating condition	0.0302	**0.0365**
Very heavy operating condition	**0.0534**	**0.0677**

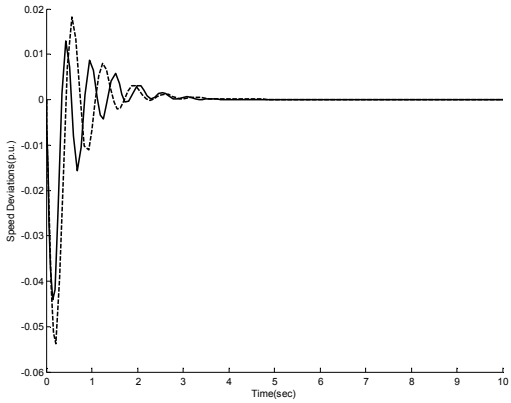

a

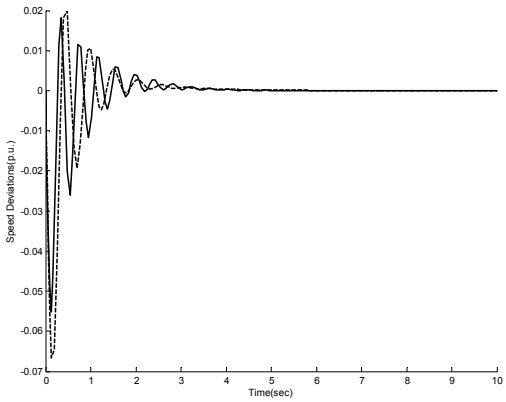

b

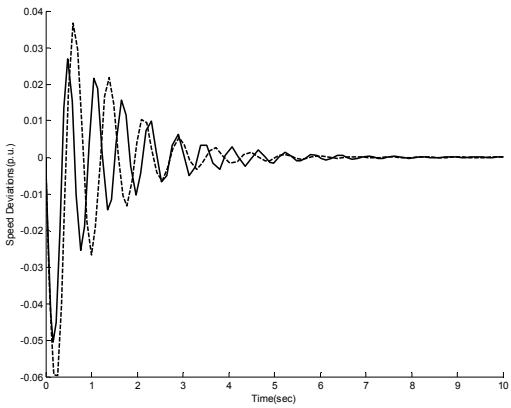

c

Fig. 4. Dynamic response $\Delta\omega_1$ following step change in demand of first area (ΔP_{D1})
a: Nominal b: Heavy c: Very heavy
Solid (IP controller), Dashed (PI controller)

6. Conclusions

This paper presented the application of a new control scheme for LFC problem. IP type controller has been successfully carried out for LFC problem. The parameters of the proposed IP controller have been tuned by using TS. The proposed IP controller had significant priority rather than PI controller. The simulation results which have been carried out on a two-area electric power system showed the viability of IP controller. The PI controller is the most commonly used controller in the industry and practical systems, therefore the paper's results can be used for the practical LFC systems.

REFERENCES

1. Tan, W., 2010. Unified tuning of PID load frequency controller for power systems via IMC. IEEE Transactions Power Systems. 25(1): 341-350.
2. Vrdoljak, K., N. Peric, I. Petrovic, 2009. Sliding mode based load-frequency control in power systems. Electric Power Systems Research. 80: 514–527.
3. Kocaarslan, I., E. Cam, 2005. Fuzzy logic controller in interconnected electrical power Systems for load-frequency control. Electrical Power and Energy Systems. 27: 542–549.
4. Liu, F., Y.H. Song, J. Ma, S. Mai, Q. Lu, 2003. Optimal load frequency control in restructured power systems. IEE Proceedings Generation, Transmissions and Distribution. 150(1): 87-95.
5. Rerkpreedapong, D., A. Hasanovic, A. Feliachi, 2003. Robust load frequency control using genetic algorithms and linear matrix inequalities. IEEE Transactions Power Systems. 18(2): 855-861.
6. Zribi, M., M. Al-Rashed, M. Alrifai, 2005. Adaptive decentralized load frequency control of multi-area power systems. Electrical Power and Energy Systems. 27: 575–583.
7. Shayeghi, H., H.A. Shayanfar, O.P. Malik, 2007. Robust decentralized neural networks based LFC in a deregulated power system. Electric Power Systems Research. 77: 241–251.
8. Taher, S.A., R. Hematti, 2008. Robust decentralized load frequency control using multi variable QFT method in deregulated power systems. American Journal Applied Sciences. 5(7): 818-828.
9. Wood, A.J., B.F. Wollenberg, 2003. Power generation, operation and control. John Wiley & Sons.
10. Sul, K.S., 2011. Control of Electric Machine Drive Systems, John Wiley & Sons, Inc., Hoboken, NewJersey.
11. Glover, F., 1986. Future Paths for Integer Programming and Links to Artificial Intelligence, Computers and Operations Research. 13: 533-549.
12. Glover, F., E. Taillard, M. Laguna, D. de Werra, 1993. Tabu Search. Annals of Operations Research. vol. 41.
13. Faigle, U., W. Kern, 1992. Some Convergence Results for Probabilistic Tabu Search. ORSA Journal on Computing. 4: 32-37.