*J. Appl. Environ. Biol. Sci.*, 5(9)166-173, 2015

ISSN: 2090-4274
Journal of Applied Environmental and Biological Sciences
*www.textroad.com*

# PID Voltage Control For DC Motor Using MATLAB Simulink and Arduino Microcontroller

**Nawi Berahim[1], Sulaini Besar[1], Mohd Zain Abdul Rahim[2], Shamsul Aizam Zulkifli[3*], Zairi Ismael Rizman[4]**

[1]Department of Mechanical Engineering,
[2]Department of Electrical Engineering,
Politeknik Sultan Mizan Zainal Abidin, Dungun, Terengganu, Malaysia
[3]Department of Electrical Power Engineering,
Universiti Tun Hussein Onn, Batu Pahat, Johor, Malaysia
[4]Faculty of Electrical Engineering,
Universiti Teknologi MARA, Dungun, Terengganu, Malaysia

*Received: April 16, 2015*
*Accepted: July 21, 2015*

## ABSTRACT

This paper focuses on the design and implementation of proportional integral derivative (PID) voltage control for direct current (DC) motor. This controller has been selected due to the ability of the block diagrams that can be built in the Matrix Laboratory (MATLAB) Simulink. The MATLAB Simulink block will be used as an interface between the design controller that will be downloaded to the Arduino. The gating signal generation of the Arduino microcontroller will be observed. This microcontroller is selected due to low cost and easy market availability. DC motor is a machine that widely used due to excellence speed control for acceleration and deceleration. The PID controller is employed to control the output voltage of three phase controlled rectifier to run a DC motor. The modelling, control and simulation of this research has been implemented by using MATLAB Simulink Software version 2013a. The Pulse Width Modulation (PWM) signals which generated from MATLAB Simulink model will be burnt into Arduino microcontroller. The Arduino microcontroller board is an interfacing between MATLAB Simulink model and actual hardware. The PWM signals from Arduino will step up by using a gate driver and will be sent to power metal oxide semiconductor field effect transistor (MOSFET) gates for triggering rectifier. The output which produced from this controlled rectifier is in DC form. Simulation analysis of PID control voltage for the open loop and closed loop were successfully conducted. The results show that the error of voltage for closed loop is lower compared to the open loop. Furthermore, hardware has been set up to verify the MATLAB Simulink model.

**KEYWORDS:** PID, MATLAB Simulink, PWM, Arduino Microcontroller, Voltage Control.

## INTRODUCTION

Direct current (DC) motor is a machine that converts electrical energy into mechanical energy. It is a mechanically commutated electric motor which powered from DC. Two main parts of DC motor are rotor and stator. Stator is a stationary part while rotor is a rotating part. Nowadays, DC motor plays an important role in research and laboratory experiments due to its simplicity and low cost. Thus, fine speed control is one of the reasons for the strong competitive position of DC motors in the modern industrial applications. The speed of the DC motor can be controlled by changing the voltage applied to the armature (voltage control method) or by changing the field current (flux control method). The introduction of variable resistance in the armature circuit or field circuit allowed speed control. Modern DC motors are often controlled by power electronics systems which called DC drives. This research is to develop proportional integral derivative (PID) voltage control to control the speed of a DC motor.

### Problem Statements

DC motor is widely used in speed control systems in industry which needs high control requirement in order to achieve good production. One of the most common methods to drive a DC motor is by using Pulse Width Modulation (PWM) signals which respect to the motor input voltage. Manual controller by using a variable resistor (VR) is also not practical where it can waste time and cost. By varying the applied voltage with a variable resistor, the speed can be varied from zero to the maximum rotation per minute (RPM) of the motor. Making a controller

**Corresponding Author:** Nawi Berahim, Department of Mechanical Engineering, Politeknik Sultan Mizan Zainal Abidin, Dungun, Terengganu, Malaysia, E-mail: nawi.poli@1govuc.gov.my

based on a computer can reduce cost and time. The low cost electronic devices can be designed to make a speed controller system.

**Objectives**

The objectives of this research are:

i. to develop the PID voltage control for DC motor.
ii. to design three phase rectifier for DC motor.
iii. to design gate driver for three phase rectifier.
iv. to communicate between MATLAB software and Arduino microcontroller.

## LITERATURE REVIEW

**DC Motor**

The DC motors have been popular in the industrial control area for a long time. It has many advantages such as high start torque characteristic, high response performance and easier to be linear control. The combination of proportional, integral and derivative control action is called PID control action. PID controllers are commonly used to regulate the time domain behavior of many different types of dynamic plants. These controllers are extremely popular where they can usually provide good closed-loop response characteristics [1]. DC motors are capable for control capabilities which means the speed, torque and even direction of rotation can be changed. It is used in speed control applications due to its low cost, excellent drive performance and low maintenance. DC motors can also provide a high starting torque at low speed, and it is possible to obtain speed control over a wide range. The induced voltage (E) is generated by the rotation of the electrical coil through the fixed flux lines of the permanent magnets. This voltage is often referred to as the back electromagnetic field (EMF). The following equations are applicable for all DC motors

$$E = K_e \Phi \omega_m \tag{1}$$

$$V = E + I_a R_a \tag{2}$$

$$T = K_e \Phi I_a \tag{3}$$

where $\Phi$ = flux per pole, $I_a$ = armature current, V = armature voltage, $R_a$ = resistance of the armature circuit, $\omega_m$ = speed of the motor, T = tork h developed by the motor and $K_e$ = motor constant.

DC motors are seldom used in ordinary applications where all electric supply companies furnish alternating current (AC). However, for special applications such as in steel mills, mines and electric trains, it is advantageous to convert AC into DC in order to use DC motors. The reason is that speed/torque characteristics of DC motors are much more superior to that of AC series-wound, shunt-wound and compound wound. The use of a particular DC motor depends upon the type of mechanical load that it has to drive [2].

Motors that operate from DC power sources have many applications where speed control is desirable. The most desirable characteristic of DC motors is their speed control capability. By varying the applied voltage with a rheostat (variable resistor), speed can be varied from zero to the maximum RPM of the motor [3].

**Three Phase Controlled Rectifier**

Three phase controlled rectifiers have a wide range of applications, from small rectifiers to large high voltage direct current (HVDC) transmission systems. They are used for electrochemical processes, many kinds of motor drives, traction equipment, controlled power supplies and many other applications [4].

A three phase fullycontrolled bridge rectifier can be constructed using six metal oxide semiconductor field effect transistors (MOSFETs) or SCRs. Three phase controlled rectifier is used to convert 3-$\phi$ (415 VAC) AC to DC voltage. The output DC is 415 VDC. This output voltage will be supplied to DC motor. The specification of motor is 220VDC, so the output of rectifier will be step down from 415VDC to 220VDC. Figure 1 shows the circuit of three phase controlled rectifier. The three-phase bridge rectifier circuit has three-legs, each phase connected to one of the three phase voltages.

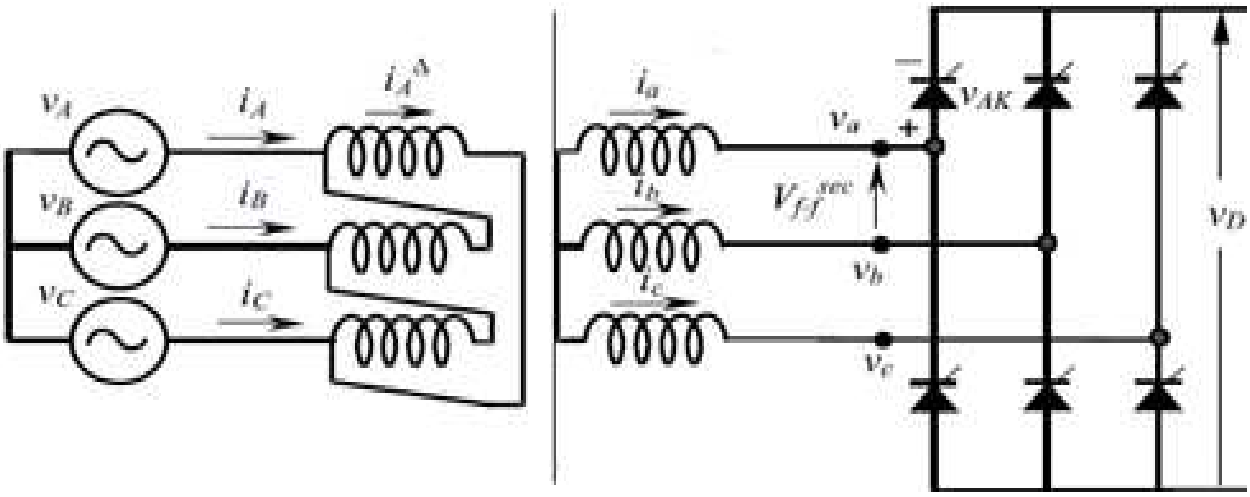


Figure1: Three-phase controlled full wave rectifier

**Gate Driver**

The basic concepts of circuits and technologies for gate drivers in power converters are focusing on voltage controlled devices like power MOSFETs. Global trends towards energy efficiency over the last three decades have facilitated the need for technological advancements in the design and control of power electronic converters for energy processing. Voltage controlled devices are semiconductors which require a constant voltage drive on the gate control terminal in order to remain in conduction. The input drive requirements of these devices are substantially lower than their current driven counterparts, and are the preferred choice in modern power electronics. Two such devices are the power MOSFET and the insulated-gate bipolar transistor (IGBT) which are forced commutated switching devices that being fully controlled at the gate terminal under normal operating conditions. Both MOSFETs and IGBTs require sufficient charge deposited into their gate junctions, whilst maintaining a minimum gate threshold voltage in order to remain in conduction. When designing a gate driver, it is always important to understand both static and dynamic behavior of the semiconductor devices used as it aids the effectiveness of the design for a given gate driver system [5].

## METHODOLOGY

This research is to develop PID voltage control for the purpose to control the speed of a DC motor. The main contribution is the algorithm of PID controller. PID controller will be developed in MATLAB Simulink. An Arduino board is as an interfacing between MATLAB Simulink and outside world (rectifier, gate driver and DC motor). This research is divided into two parts that consists of controller development in MATLAB Simulink and hardware development for verification. The works include designing, modelling, simulation and verification. Three phase rectifier and gate driver are designed by using Proteus software. Modelling and simulation were conducted by using MATLAB Simulink software.

**Block Diagram of Research**

The block diagram of this research is shown in Figure 2. Three phase fully controlled bridge rectifier circuit is used to convert three phase AC voltage to DC voltage in order to supply voltage to DC motor. A three phase fully controlled bridge rectifier is constructed by using six power MOSFETs. Three phase gate driver is a power amplifier that accepts a low power input from Arduino and produces a high current drive input for the gate of a high power transistor i.e. power MOSFET. In essence, a gate driver consists of a level shifter in combination with an amplifier. Arduino board is an interfacing between software development and hardware development. Voltage sensor can detect the input voltage to the DC motor. Arduino can sense the environment by receiving input from sensor and can affect its surrounding by controlling motor. The chip on Arduino board is programmed by using MATLAB. For software development, PID controller algorithm is developed by using MATLAB Simulink. The effectiveness of controlling the speed is by changing the value of proportional gain, integral gain and derivative gain ($K_P$, $K_I$ and $K_D$). The output voltage of the rectifier will be compared with reference value, and PID will process until minimum error obtained.

From the block diagram below, three phase rectifier circuit will convert three phase input to DC output for supplying voltage to DC motor. Six PWM signals from gate driver will be used for triggering gates MOSFETs of rectifier. The purpose of gate driver is to power up PWM signal that produced from Arduino from 5V to 15V. Modelling and simulation were done in MATLAB Simulink part. In this motor control system, PID controller was used using the voltage control technique. The controller will compare the motor voltage with the reference voltage. If there is an error, the controller will generate the pulse width modulation (PWM) to feed into the three phase controlled rectifier. This process will continuous until the error nearly zero to give high performance of the DC motor.

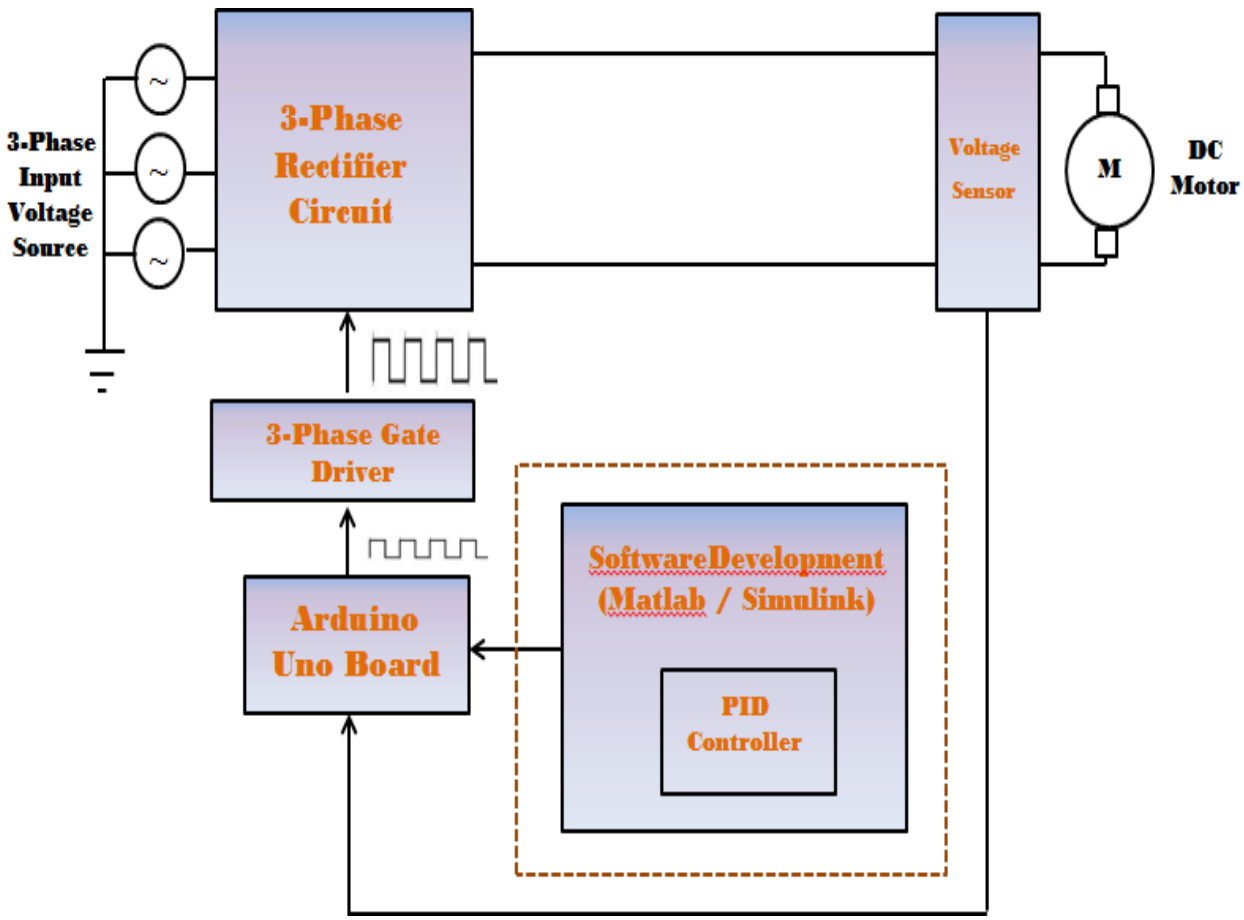


Figure 2: Block diagram of research

**Controller Development in MATLAB**

For controller part, MATLAB Software will be used as a medium for PID development. MATLAB Simulink can build, download and run the model on Arduino Uno. In MATLAB Simulink Library Browser, the Simulink support package can be added. The PID Controller block is available under continuous in Simulink. This PID functions have been enough to the most control processes. The PID controller is mainly to adjust an appropriate proportional gain ($K_P$), integral gain ($K_I$), and differential gain ($K_D$) to achieve the optimal control performance. PID control uses the error to calculate three components of the output that correspond to the proportional, integral and derivative feedback. The equation for PID control often takes the following form in the time domain.

$$u(t) = K_p e(t) + K_i \int_0^t e(t)dt + K_d \frac{de(t)}{dt} \quad (4)$$

Figure 3 shows the block of PID in Matlab Simulink. The output of this controller is the summation of Proportional, Integral and Derivative. The required output of the controller will be getting by adjusting the proportional, integral and derivative gain. The “three-term” functionalities are highlighted by the following [6].

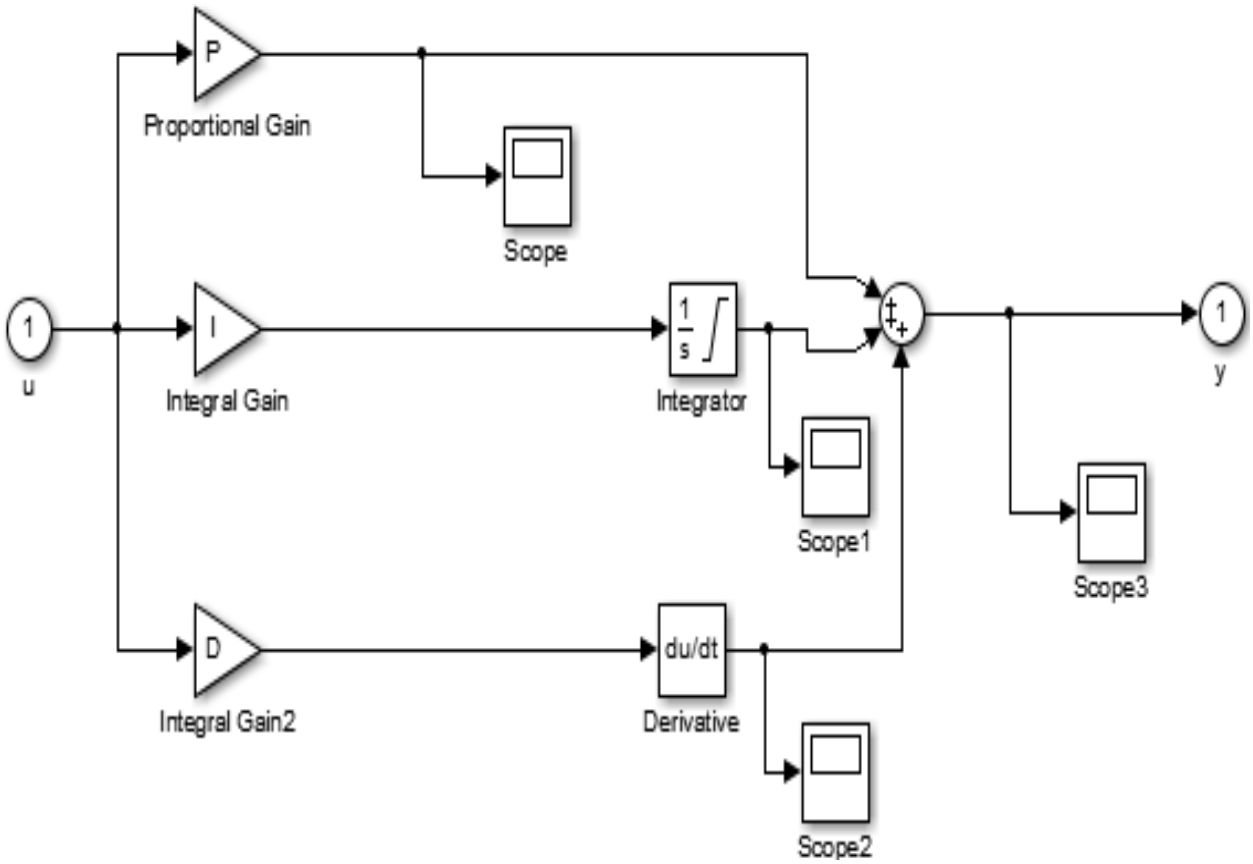


Figure 3: PID controller block in MATLAB/Simulink

**Experimental Setup**

The experimental set up for testing the PID control voltage is shown in Figure 4. This is the integration of three phase AC source, Arduino Uno microcontroller, gate driver, three phase rectifier, voltage sensor and multi-function DC motor. Multimeter is used to measure the the voltage output of the rectifier that is fed to the DC motor while oscilloscope is used to measure and display the waveform of three phase rectifier.

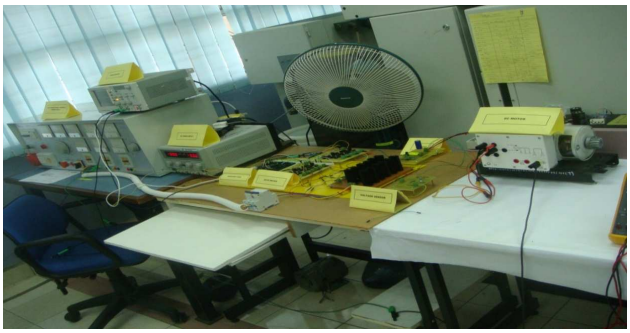

Figure 4: Experimental setup

## RESULTS AND DISCUSSION

**Open Loop Simulation**

Figure 5 shows the design for open loop control developed in MATLAB Simulink. For open loop system, a type of control system that uses only an input signal to get an output result. There is no feedback to adjust the process, so adjustment is made manually by operator. The graph of output voltage for target voltage = 30V is shown in Figure 6.

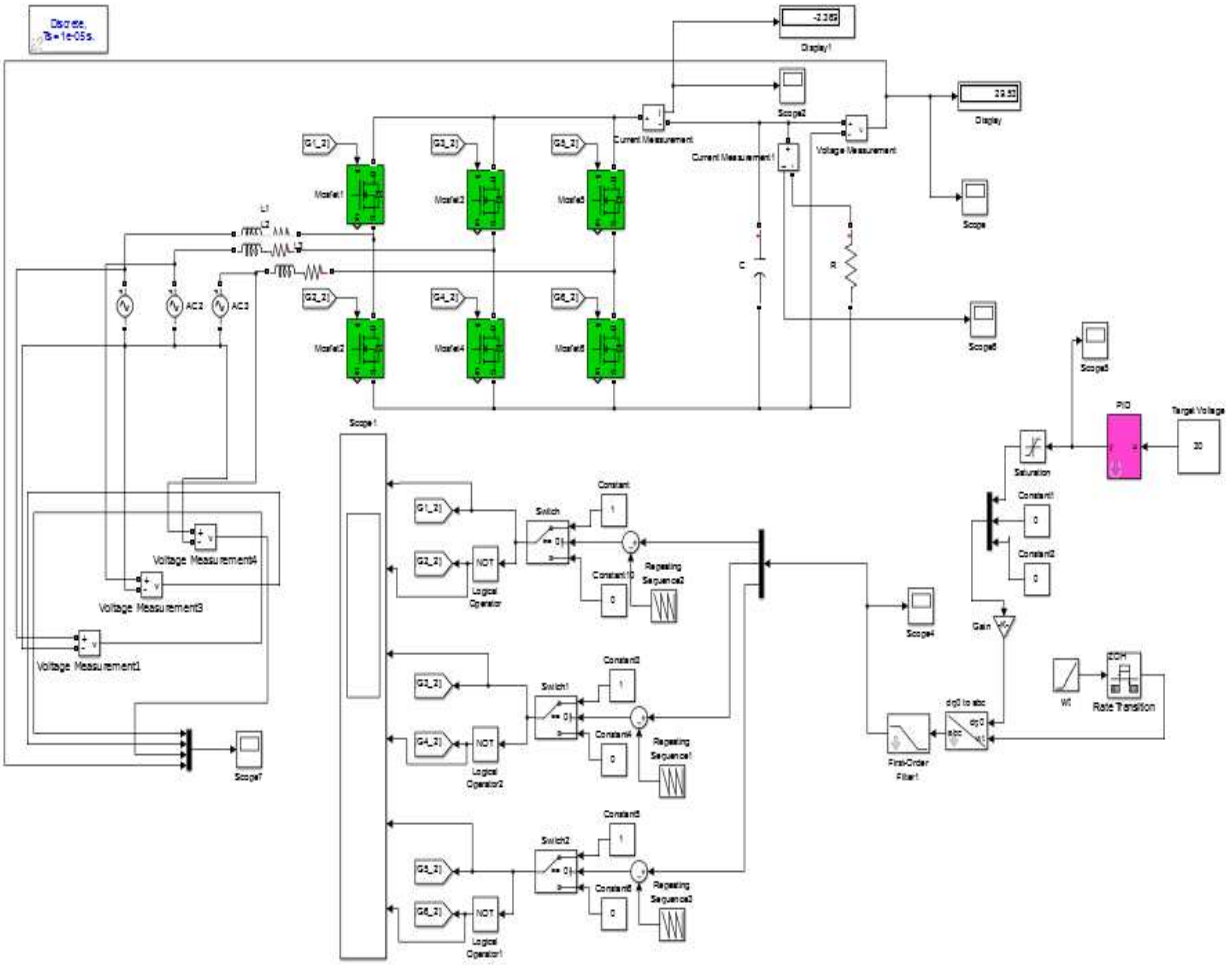


Figure 5: MATLAB Simulink model for open loop

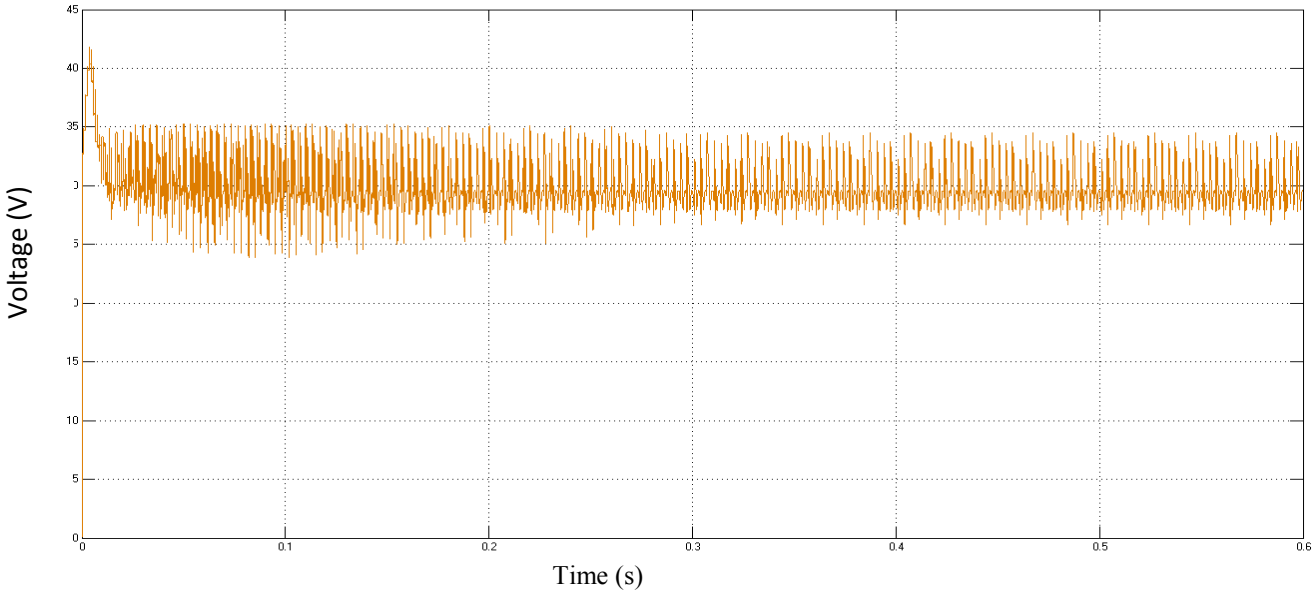


Figure 6: Output voltage versus time for target voltage 30V for open loop system

**Closed Loop Simulation**

This full MATLAB Simulink model is shown in Figure 7. For closed loop, feedback is taken into account in the model. Error is the difference between target and actual. The PID Controller will repair the error. The graph of output voltage for target voltage = 30V for closed loop is shown in Figure 8.

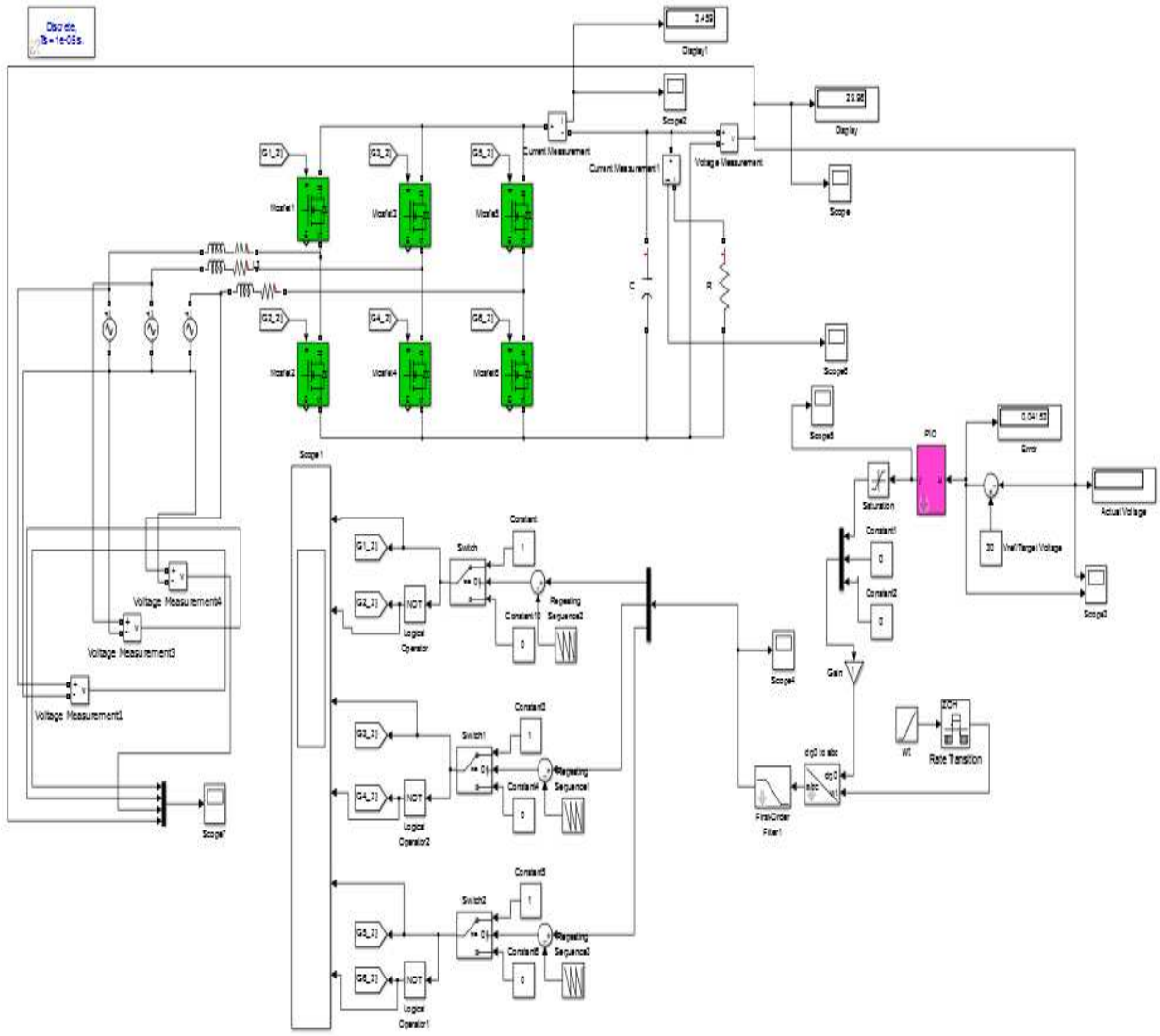


Figure 7: MATLAB Simulink Model for closed loop analysis (with feedback)

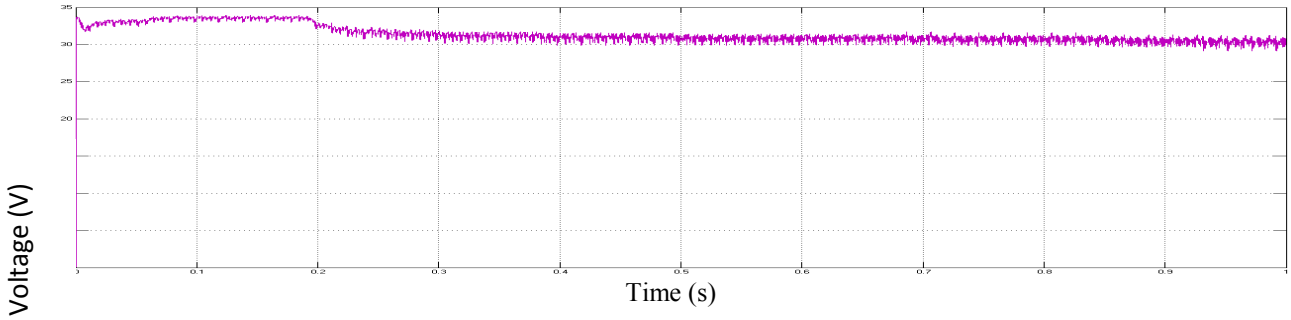


Figure 8: Output voltage versus time for the closed loop controller for target voltage = 30V

**Hardware Analysis**

For hardware analysis, the DC output voltage seen from oscilloscope. The waveform is in pulsated DC that tried to follow the reference set point. For target voltage of 30V, the output voltage from this controlled rectifier is approximately 29.5V. Due to the high switching frequency, this controlled rectifier still produced pulsating DC. However, the desired result still can be achieved and quite close to the reference or target set by the user. Table 1 shows the actual output voltages for three target voltages respectively.

Table 1: Data for hardware analysis

| No. | Target Voltage (V) | Actual Voltage (V) |
|---|---|---|
| **1** | 30 | 29.5 |
| **2** | 35 | 34V |
| **3** | 40 | 39 |

## CONCLUSION

This project presents the simulation and hardware results to control voltage for DC motor using PID Controller. The simulation and hardware analysis for open loop and closed loop systems were successfully conducted. From the simulation for both open loop and closed loops, the actual voltage is close to a reference voltage with minimum error. An investigation was carried out to test the controller under the comparison of voltage measured (output voltage) at the DC motor and the reference voltage (target voltage). Based on the results, the error in closed loop is lower than open loop. For hardware analysis, the value of output voltage is close to the target or reference. This output DC voltage is lower than the target but controller tries to follow reference signal. The difference might be due to switching speed of PWM waveforms from Arduino and power MOSFET. The waveform pattern of this DC output is not pure with slightly ripple.

It can be concluded that the PID controller had been successfully implemented to control output voltage for DC motor and performance results shows that the PID controller minimized the error. In conclusion, the main objective of this project to develop PID control voltage in MATLAB Simulink for DC motor is achieved. This PID control system is quite robust and practical in implementation for achieving target value as required by the user especially for voltage control.

## REFERENCES

1. Singh, A.P., U. Narayan and A. Verma, 2013. Speed Control of DC Motor using PID Controller Based on MATLAB. Innovative Systems Design and Engineering, 4 (6): 22-28.
2. Joseph J. Carr, 1996. Elements of electronic instrumentation and measurement. Pearson College Division.
3. Aras, M.S.M., S.N.B.S. Salim, E.C.S. Hoo and M.H. Hairi, 2009. Comparison Of Fuzzy Control Rules using MATLAB Toolbox and Simulink for DC Induction Motor-Speed Control. IEEE International Conference of Soft Computing and Pattern Recognition, pp. 711-715.
4. Juan W. Dixon, 2007. Power electronics handbook: Three-phase controlled rectifiers. Academic Press.
5. Rashid, M. H. (2014). Power electronics handbook: Devices, circuits and applications. Academic Press.
6. Ang, K.H., G. Chong and Y. Li, 2005. PID Control System Analysis, Design and Technology. IEEE Transactions on Control Systems Technology, 13 (4): 559-576.