J. Basic. Appl. Sci. Res., 3(4)987-990, 2013

ISSN 2090-4304
Journal of Basic and Applied Scientific Research
www.textroad.com

Small Scale Wind Energy Generation Schemes for Smart Grid Using FACTS Technology

[1]Saeid Vafaei, [2]Alireza Rezvani, [1]Seyed Mohsen Musavi, [3]Abbas Rezaey, [4]Erfan Mohagheghi

[1]Qom Province Electricity Distribution Company, Qom, Iran
[2]Department of Electrical and Computer Engineering, Saveh Branch, Islamic Azad University, Saveh, Iran
[3]Department of Computer Science, Saarland University, Saarbrücken, Germany
[4]Medway School of Engineering, University of Greenwich, UK

ABSTRACT

The increasing trend of world energy consumption cause to an active movement to find new resources of energies. The wind energy can be one of these options. In this paper, Small Scale Wind Energy Generation Schemes for Smart Grid Using FACTS Technology is presented. Moreover, due to novelty of such new resource of energy, two schemes is presented. Moreover, an efficient generator topology equipped with a novel control strategy can be used to achieve an efficient high altitude wind energy generation system with a high stability and reliability in electric grid systems is proposed. Flexible AC Transmission Systems (FACTS) technology is used to stabilize the proposed generator for a proper wind energy schemes for small energy generation applications.

KEYWORDS: FACTS, Wind energy Generation, Generator stabilization, small scale energy generation

INTRODUCTION

1. Purpose of the Study

In this paper, an efficient generator topology equipped with a novel control strategy can be used to achieve an efficient high altitude wind energy generation system with a high stability and reliability in electric grid systems is proposed.

2. Relevant Background Literature

Flexible AC Transmission Systems (FACTS) technology is a new emerging technology for control, stabilization and efficient energy utilization for sudden generator and load changes [1]. In [2], a new flexible alternating current transmission system (FACTS) based stabilization scheme developed for use in wind-induction generators, for stabilized efficient wind utilization. In [3], a novel contra rotor axial flux induction generator to address drawbacks of conventional low efficient induction generator has been proposed. The FACTS can highly be useful for integration of wind energy systems to grid [4, 5, and 6]. Fault diagnosis procedure of suh systems also is available such as [7].

RESEARCH QUESTIONS

To extract high altitude wind energy, several wind energy generation systems have been proposed. But, this technology is not developed as level as ground mounted wind energy generation system technology. Still interface issues, power quality and voltage regulation need to be addressed, are serious issues for distributed high attitude wind energy generation. In spite of consistent nature of high altitude wind energy, it creates security, reliability and stability problems in electric grid systems. The question is that which generator topology equipped with which control strategy offers a high efficient high wind energy generation system with a higher stability and reliability in electric grid systems.

DEFINITIONS OF KEY TERMS

1. Contra-Rotor Axial Flux Induction Generator

Contra-Rotor Axial Flux Induction Generator (CRAFIG) is a type of planar shape generator with disk shape rotors. This generator has not any stator in its design. Instead, there is another rotor (second rotor) rotating in opposite direction of first rotor. Thus, this generator has two shafts should be rotated in contrast. In other word, this generator has two mechanical inputs power. Due to high relative speed between these rotor, there is no need to gearbox to reach synchronous speed, reduces the weight of generator. Moreover, axial flux generators have a higher power to weight compared to radial flux generators. Due to light weight nature of CRAFIG it is a suitable option for high altitude wind energy generation. This generator can be converted to single phase small change in connection of its windings terminals.

2. High Altitude Wind Energy Generation System

High altitude wind energy generation system is a wind driven electrical generator which is floating at altitude using a lighter than air gas storage. A light weight tether transfers the generated electrical energy by the generator to ground user as shown in Fig. 1.

Corresponding Author: Saeid Vafaei, Qom Province Electricity Distribution Company, Qom, Iran

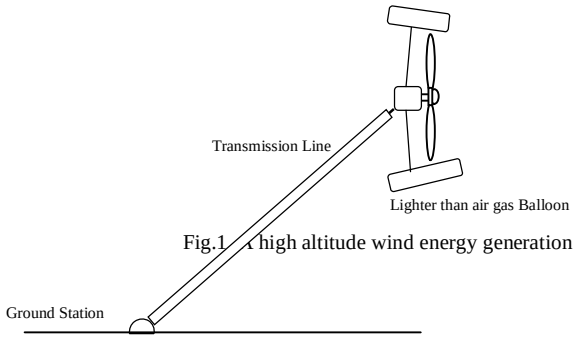

Fig.1. A high altitude wind energy generation system

RESEARCH METHODOLOGY

To answer the question, in section III, two steps have been considered.

First Step

In the first step, two different efficient three phase induction generators are converted to single phase induction generators. The first converted generator is Single phase Induction Generator (SP-IG). The second converted generator is Single Phase Contra-rotor Axial Flux Induction Generator (SP-CRAFIG). Fig. 2(a) and (b) show the SP-CRAFIG and SP-IG which are connected via a transmission line to ground station. After conversion of three phase generators to one phase generators, the performance of these two generators, which have a rated power of 50KVA at power factor of 0.85, are compared under wind speeds between 0 m/s and +50m/s and excursions-load changes as well as open or short circuit faults.

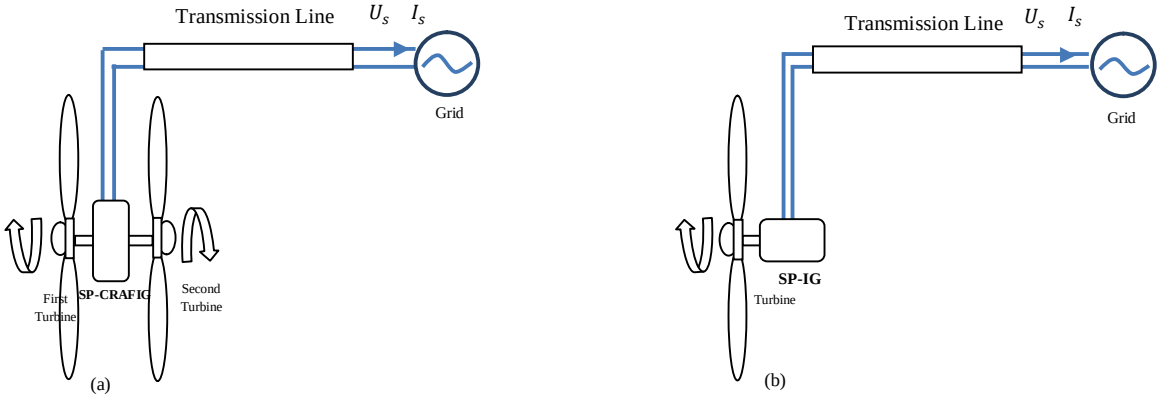

Fig. 2. Two types of induction generators. (a) Converted SP-IG, (b) converted SP-CRAFIG

Second Step

In the second step, for three different control strategies Fixed Gains compared with Fuzzy Logic and Dynamically Selected Optimal Gains. These control strategies are used for SP-CRAFIG and SP-IG for voltage stabilization to ensure stabilization and dynamic voltage regulation as well as prevent sudden loss of generator excitation due to load changes.

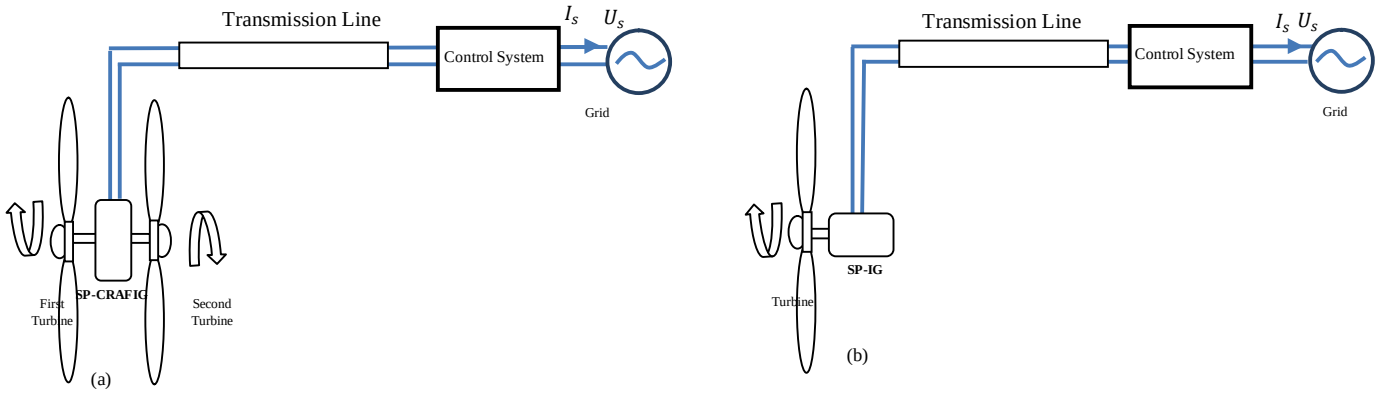

Fig. 3.Two types of induction generators which are controlled: (a) Controlled SP-IG, (b) Controlled SP-CRAFIG

Details of FACTS based control scheme are shown in Fig. 4 and 5.

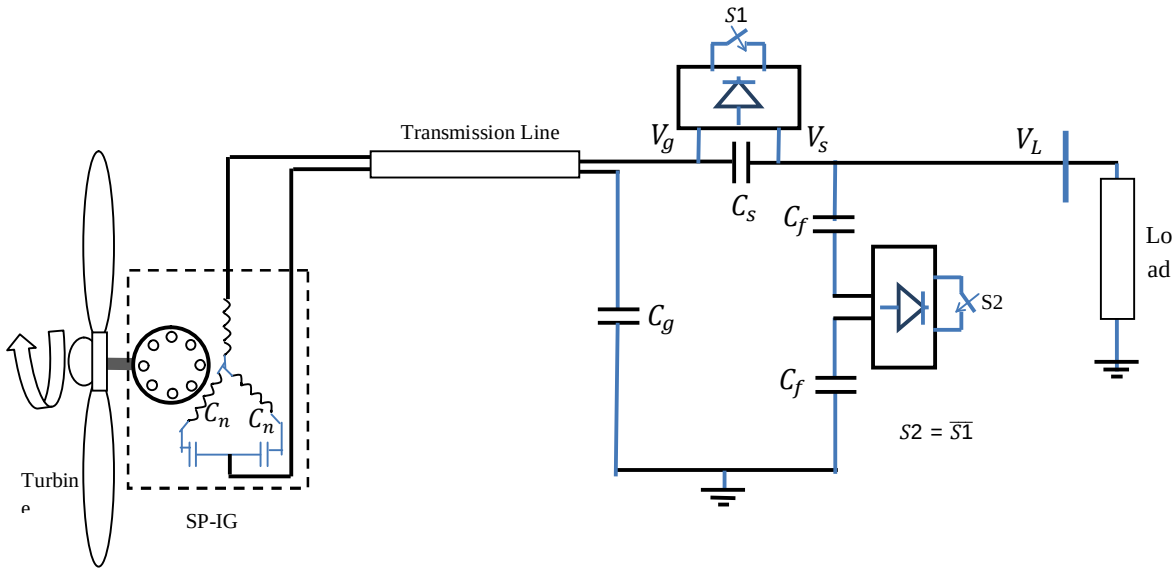

Fig. 4. FACTS based control scheme for the SP-IG operating at high altitude while transfers electrical energy via a transmission line to a ground-based load.

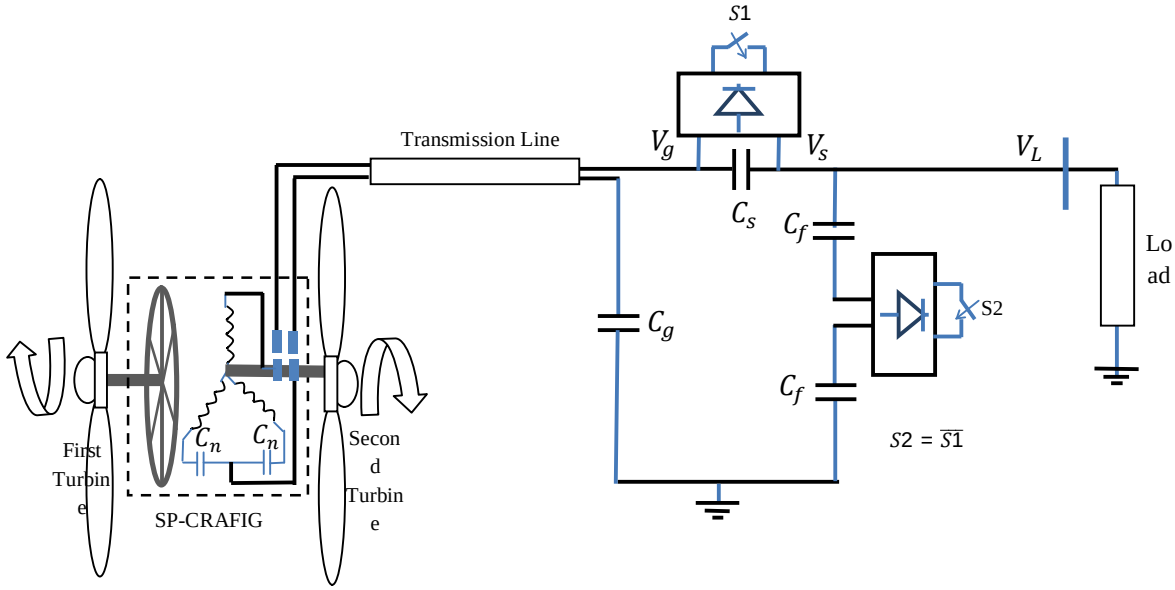

Fig. 5. FACTS based control scheme for SP-CRAFIG operating at high altitude while transfers electrical energy via a transmission line to the ground-based load.

The simulation will carry out for 20s s with and without the controllers for each of the SP-CRAFIG and SP-IG to investigate their performance in voltage stabilization, harmonic reduction and reactive power compensating. Comparison of obtained simulation results can reveal which generator topology with which control strategy is more effective and effective.

SIGNIFICANCE OF THE RESEARCH

High altitude winds offer an enormous vast and dense layer of energy over earth's surface. This layer of energy can be considered as a clean and cheap energy resource only few kilometers away from users on ground. Extraction of this layer of energy can lead to elimination of transmission line or diesel fuel transportation cost between remote Residential/Commercial load centers and generation units adds a new economic incentive to distributed high altitude wind energy generation.

ANTICIPATED PROBLEMS AND LIMITATIONS

The main limitation may be due to modeling of wind turbine. Because uninform wind flow over wind turbine, due to periodical movement of wind turbine during floating at altitude, make it hard to use steady state equations to model wind turbine performance. However, by some simplification assumption an acceptable model may be achievable.

REFERENCES

[1]. Johnsen K, Eliasson B (2004). SIMULINK implementation of wind farm model for use in power system studies. Nordic Wind Power Conference.

[2]. Mustafa E. Şahin, Adel M. Sharaf and Halil İ. Okumuş, "A novel filter compensation scheme for single phase self-excited induction generator micro wind generation system", Scientific Research and Essays, Vol. 7(34), pp. 3058-3072, 30 August, 2012

[3]. Nima Amjady, Asghar Safari-Doust, Abbas Rezaey, "A Novel Axial Flux Brushless Induction Generator with two Mechanical Power Inputs for Wind Energy Generation Applications," Journal of Basic and Applied Scientific Research (JBASR)-ISI-Indexed, vol. 2, Issue. 5, pp. 4812-4819, 2012.

[4]. M. Mounir REZAOUI, Abdallah KOUZOU, Lazhari NEZLI, M. Oulhadj Mahmoudian , "Comparative Analysis of PWM Strategies of Venturini and Roy for the Control of a [3x3] Matrix converter" International Journal of Advanced Rnewable Eergy Research, Vol. 2, No. 2, 2013

[5]. T. Nageswara Prasad, V. Chandra Jagan Mohan, V.C. Veera Reddy , "Integration of Wind Farm to Electrical Distribution", International Journal of Advanced Rnewable Eergy Research, Vol. 2, No. 2, 2013 Systems

[6]. Lai Jidong; Ming Ding; Nayar, C.V.; Liuchen Chang, "A novel control strategy for small wind generation system based on the converter without DC storage components", Sustainable Energy Technologies (ICSET), 2010 IEEE International Conference on, 1-5, 6-9 Dec. 2010

[7]. Alireza Rezvani, Maziar Izadbakhsh, Saeid Vafaei, Abbas Rezaey "A New Strategy for Fault Diagnosis, Clustering and Observing In Floating Wind Farms," J. Basic. Appl. Sci. Res., 3(1)281-288, 2013