J. Basic. Appl. Sci. Res., 3(1s)652-657, 2013
© 2013, TextRoad Publication

ISSN 2090-4304
Journal of Basic and Applied Scientific Research
www.textroad.com

Analysis of the Impact of Beams for Sensing on Sensitivity a MEMS Comb Vibrating Rate Gyroscope with Bias Error

Syede Fataneh salahedin[1], Mohammad Sadeq Akhoundi Khazr Abad[2]

[1]M.S, Physics, Department of PhysicsIslamic , Islamic Azad University, qom Branch, qom, Iran
[2] PhD, Physics, Departments of Electronics, Malek Ashtar University of Technology, Tehran, Iran

Received: June 10 2013
Accepted: July 8 2013

ABSTRACT

Achieving the optimal sensitivity of MEMS gyroscopes is important. Bias causes the coupling between excitation and detection modes, in MEMS gyroscopes and it is thus one of the most important parameters, alert the sensitivity of the device. In this paper, By using Coventor Ware software and Simulation of Matlab, the effects of bias errors on the sensitivity of two vibrating MEMS gyroscopes with four and eight independent beams is simulated and analyzed. Simulation and analyisation resulat are compared between two gyroscopes.

Analysis has been used to solve the equations of motion with respect to the excitation frequency bias and low bias offset between the elastic axis and the reader, as distinct from, and simulate their effects on sensitive parts of Simulik. Results show that the frequency of stimulation for gyroscope bias error of eight beams, of the four beams gyroscopes, reduces the value of 10^{-5}, Reduces bias and error deviation between the reader and the elastic axis value of 10^{-1} . It generally reduces the gyroscope makes eight beams for sensitivity, but it will improve stability.

KEYWORDS: Vibratory gyroscope MEMS, excitation and detection modes, the bias error

1. INTRODUCTION

The need for high-performance micro machined gyroscopes force the research towards dedicated mechanical designs combined with improved micro fabrication technologies and high sensitivity readout and control electronics. Among many micro machined gyroscopes, Coriolis vibratory rate gyroscopes have demonstrated significant progress within the past decade satisfying the requirements of several applications, such as guidance, robotics, tactical-grade navigation, and automotive applications[1,2].

We have done many studies to improve their performance, by using a separate structure and symmetry[3]. These structures are effective on micro-electro-vibrational coupling and the sensitivity of the gyroscope structure, dynamic error and bias error[4,5]. In this article we will examine two gyroscopes with four and eight Independent Beams. The equations of motion can be simulated with bias in CoventorWare. Will be simulated using Simulink, the effect on sensitivity to bias. Finally, they will compare the results for each of the two gyroscopes.

2. Principles of gyroscopes

Microelectromechanical vibratory gyroscope is composed of a mass and vibrating beams, The mass is supported by four beams And mass will oscillate in both orthogonal directions easily, The oscilations are due to the excitation and detection of two-mode. The beams of the sensor connect the oscillation mass to the frame and the frame is connected to the bent substrate by four drive beams , mass is derived by combelectrod. There are two electrod under the mass; one for capacitance detection and the other for frequency tuning.

When AC and DC voltages are applied to the comb electrodes, the mass oscillates along the *y*-direction (drive mode), An externally induced rotation about the x-axis (angular rate: Ω) produces a deflection in in the *y*-direction due to the Coriolis force. This deflection is detected as a change in the capacitance between the mass and the detection electrode. It is figured a micromachined vibrating rate gyroscope with the simple structure in Fig(1).

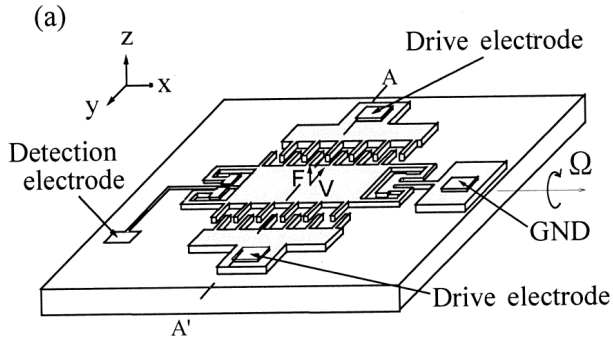

Fig1: the simple structure of Microelectromechanical vibratory gyroscope

*Corresponding Author: Syede Fataneh Salahedin, M.S, Physics, Department of PhysicsIslamic , Azad University, Qom Branch, Qom, Iran. f.salahedin@yahoo.com

In this paper, first achieved in CoventorWare the resonance frequency of the excitation and detection modes is achieved. In MATLAB Simulink, the effect of the bias on the gyroscope output is simulated and finally the results of the two pieces compared together.

3. Simulation and related equations

In figure 1 ,when the mass is driven along the *x*-direction by an external force $F_0 = F(t)\sin\omega t$ and it is subjected to a constant angular rate(Ω), a Coriolis force(F_c=2mΩ$\dot{y}$) is induced in the *z*-direction. In this case, the equation of motion is

$$m\ddot{y} + c_y\dot{y} + k_y y = f_0 \sin\omega t \quad (1)$$

$$m\ddot{z} + c_z\dot{z} - 2m\Omega\dot{y} + k_z z = 0 \quad (2)$$

where *m* is the mass; C_y and C_z are the resistances viscosity, and k_y and k_z are the spring constants, for the *y*- and *z*-directions, respectively. When the mass is driven such that it oscillates at the resonance frequency, therefore the oscillatory motion derived from Eqs. (1) and (2) is

$$y(t) = -y_m \cos\omega_y t \quad (3)$$

$$z(t) = \frac{2m\Omega}{k_z}\frac{y_m}{\sqrt{\left\{1-\left(\omega_y/\omega_z\right)^2\right\}^2+\left(\omega_y/\omega_z\right)^2}}\times\sin\left(\omega_y t-\varphi\right) \quad (4)$$

in which $y_m = \frac{F_0 Q_y}{k_y}$, $\varphi = \tan^{-1}\frac{\lambda}{Q_z(1-\lambda^2)}$, $Q_y = \frac{m\omega_y}{c_y}$, $Q_z = \frac{m\omega_z}{c_z}$, $\lambda = \frac{\omega_y}{\omega_z}$

where ω_y and ω_z are the resonant frequencies, and Q_y and Q_z are the resonance quality factors, for the *y*- and *z*-directions, respectively; and *x* is the amplitude at resonance for the *x*-direction. If the drive amplitude is constant, then the amplitude of the resulting oscillatory motion is proportional to the angular rate(Ω) . Furthermore, by decreasing the frequency mismatch ($|\omega_y - \omega_z| = |\Delta\omega|$) the sensitivity of the gyroscope($|z/\Omega|$) is improved but the stability decreased. In figure (2) the Simulink of equations of motion (1) and (2) is shown.

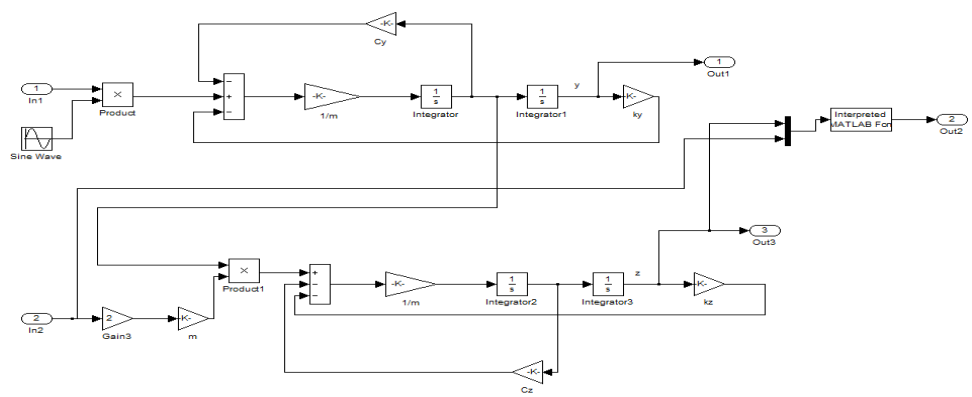

Fig 2: Simulink for the equations of motion without bias

Bias in micromechanical gyroscopes can be the result of many different factors. The most important of these is vibration at the excitation frequency. The interference of vibrations at other frequencies will be small and can be filtered. It is obvious, that for the translational gyroscopes, only translational vibration will have an effect, and for rotational gyroscopes only angular vibrations will be relevant. The effect of this vibrations on this equation would be

$$m\ddot{y} + C_y\dot{y} + k_y y = F_0 \sin\omega t + F_1(t) \quad (5)$$

$$m\ddot{z} + C_z\dot{z} - 2m\Omega\dot{y} + k_z z - k_c = F_2(t) \quad (6)$$

It is considered$F_i(t) = F_i \sin\omega t$, to solve these equations $F_1(t)$, $F_2(t)$ are the bias force components on the drive and senses axes are .in fig (3) the Simulink of equations of motion (5) and (6) is shown.

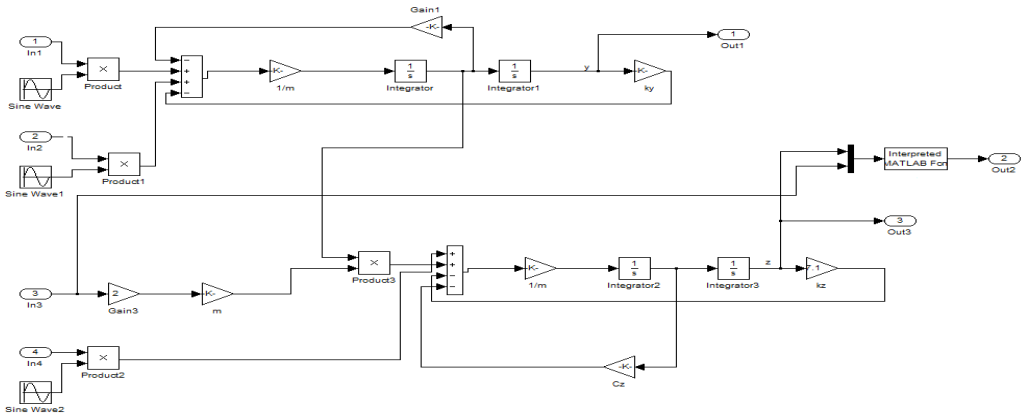

Fig 3: Simulink for the equations of motion of vibration at the excitation frequency bias

The mass and beams of micromechanical vibratory gyroscope, normally due to fault in manufacturing process are not completely symmetric , so result in misalignment between elastic and readout axes. This deflection is one of the source of the bias error that its effect on the equations of the motion would be

$$m\ddot{y} + c_y\dot{y} - \theta(k_y - k_z)z + k_y y = F_0 \sin \omega t \quad (7)$$

$$m\ddot{z} + c_z\dot{z} - 2m\Omega\dot{y} + \theta(k_z - k_y)y + k_z z = 0 \quad (8)$$

Here q is the misalignment angle. In fig (4) Simulink of equations of motion (7) and (8) is shown.

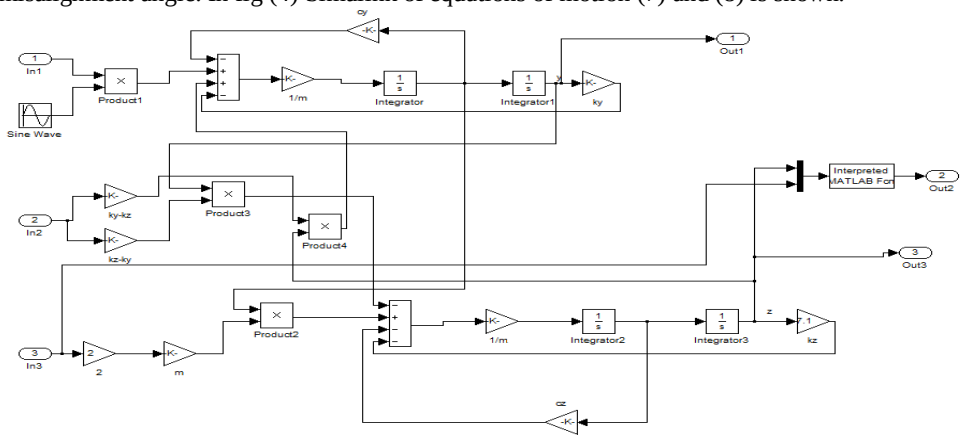

Fig 4: Simulink for the equations of motion of bias is a misalignment between elastic and readout axes.

4. A Gyroscope with four Independent Beams for Sensing

In this section we will consider the gyroscope with Independent four sense beams simulated by CoventorWare , And by an analyst Mem Mech, resonant frequency drive and sense modes respectively 5.3kHzand 7.79kHz obtained .Simulation results shown in Fig 5 and 6.

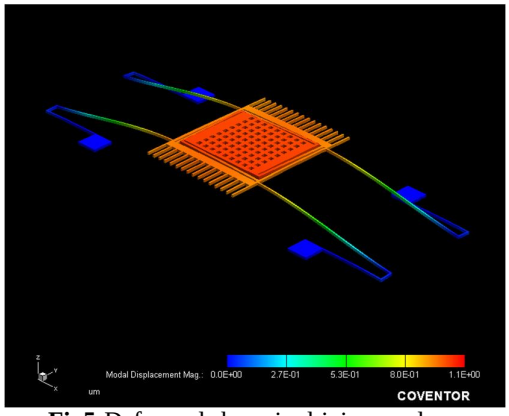

Fig5: Deformed shape in driving mode of the gyroscope with independent beams for driving and sensing

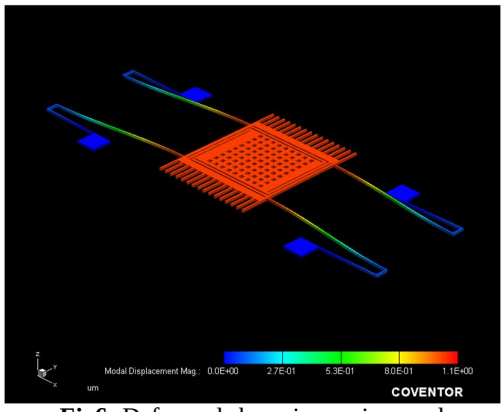

Fig6: Deformed shape in sensing mode of the gyroscope with independent beams for driving and sensing

In the drive mode, the outer beams are bent in the *y*-direction, but there is little deflection of the inner beams as illustrated in figure 5.

In the detection mode, the inner beams are bent in the *z*-direction, but there is little deflection of the outer beams. These results indicate that the outer and inner beams are rigid with respect to the *z*- and *y*-directions, respectively. Data used in the MATLAB simulator is obtained by analyst Mem Mech and are listed in Table (1).

5. A Gyroscope with eight Independent Beams for Sensing

In this section we will consider the gyroscope with Independent eight Beams for Sensin The simulated by CoventorWare , And by an analyst Mem Mech, obtained resonance frequency excitation and detection modes. In the drive mode, the outer beams are bent in the *y*-direction, but there is little deflection of the inner beams.

In the detection mode, the inner beams are bent in the *z*-direction, but there is little deflection of the outer beams. These results indicate that the outer and inner beams are rigid with respect to the *z*- and *y*-directions, respectively. This means that the two pair of beams move independently in the two modes. Data calculated using the simulator to simulate of Matlab, using analyst Mem Mech and are listed in Table (1) too. respectively 5.35kHzand 7.75kHz.Simulation results shown in Fig 7 and 8.

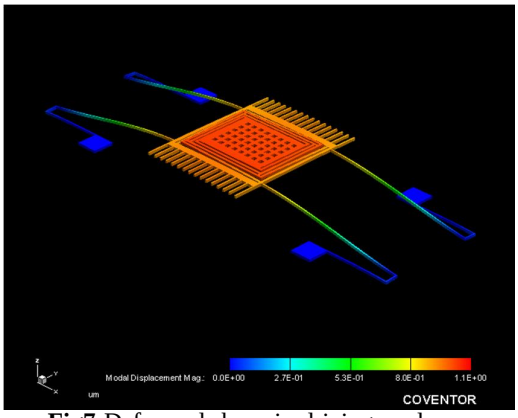

Fig7: Deformed shape in driving mode of the gyroscope with independent beams for driving and sensing

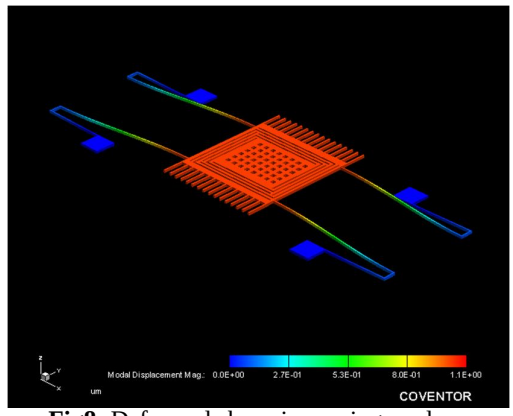

Fig8: Deformed shape in sensing mode of the gyroscope with independent beams for driving and sensing

Table (1): spring stiffness and damping parameters of gyroscopic

	K_y(N/m)	K_z (N/m)	C_y(Ns/m)	C_z(Ns/m)	M(kg)
Gyroscope with four Beams	3.33	1.79	0.18e-6	0.17e-6	0.3e-8
Gyroscope with eight Beams	8.36	7.1	0.22e-6	0.21e-6	0.29e-8

6. graph of the results and outputs of the gyroscope sensitivity

In this section, the output of Simulink, for the drive and sense modes, taking into account gyroscopic equations , in two state; free of bias and perceived bias in drive frequency will be shown and bias error is a misalignment between elastic and readout axes.

External drive force is intended $F_0 = F(t)\sin\omega t$, drive acceleration is q_0 =1m/s^2, so f_0 would be 3.6×10^{-6}. We want the output of the angular velocity equations in all regions for Ω=5rad/s, $\theta = 1^{\circ}$, q_n =1m/s^2.Outputs for the equations of motion are shown when there is no bias error and When there are bias errors. The sensitivity of the output response will be displayed on the figures (9) and (10) and (11) will compare the time 1×10^{-3}(s) and the results are given in Table (2), respectively.

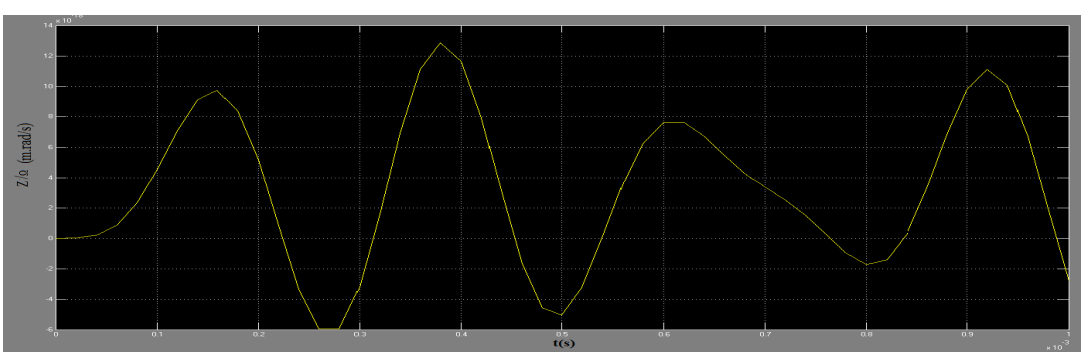

(a)

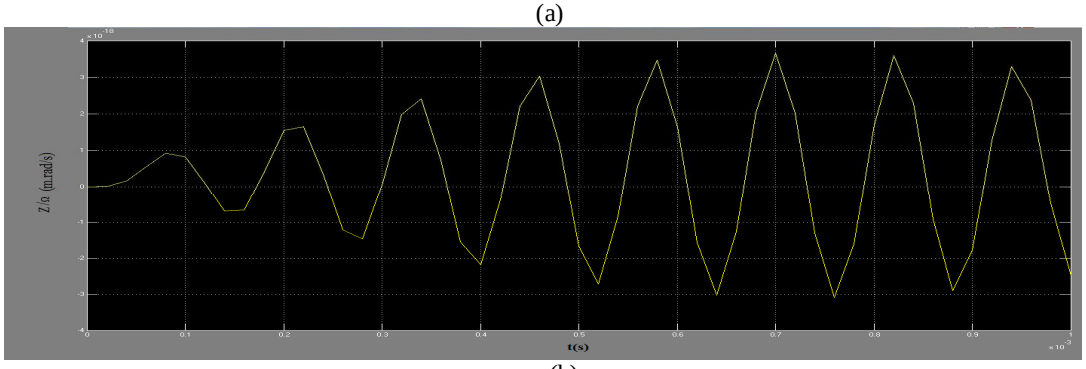

(b)

Figu9: The sensitivity of the output shown in the equations of motion when there is no bias error, 1×10^{-3}(s), $q_0 = 1$m/s^2, Ω=5rad/s.a) Gyroscope with four Beams,b) Gyroscope with eight Beams.

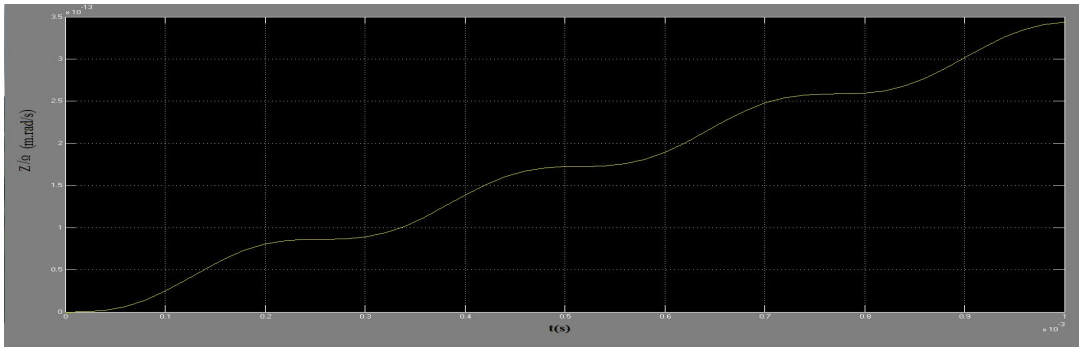

(a)

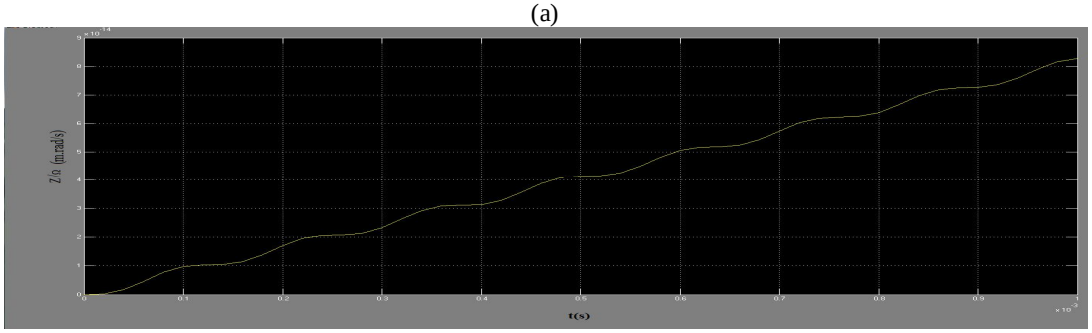

(b)

Fig10: The sensitivity of the output shown in the equations of motion when there is vibration at the excitation frequency bias, 1×10^{-3}(s), $q_0 = 1$m/s^2, Ω=5rad/s.a) Gyroscope with four Beams,b) Gyroscope with eight Beams.

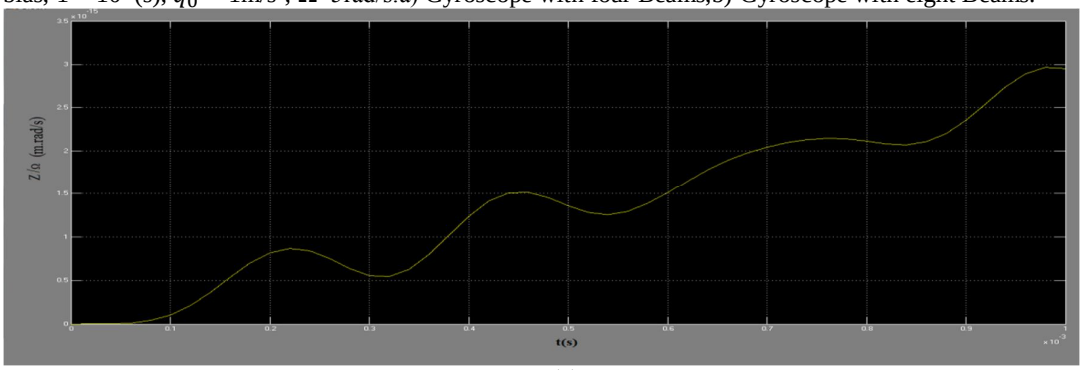

(a)

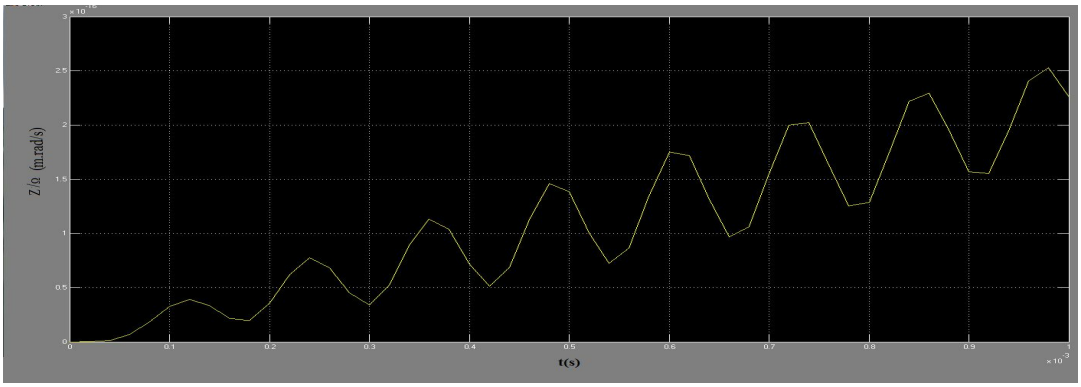

(b)

Fig11: The sensitivity of the output shown in the equations of motion when there is bias is a misalignment between elastic and readout axes, 1×10^{-3}(s), q_0 =1m/s^2, Ω=5rad/s, $\theta = 1^{\circ}$ .a) Gyroscope with four Beams,b) Gyroscope with eight Beams.

Results of the sensitivity of the output response of the four-beams , gyroscope and eight-beams , gyroscope will be shown in Table (2).

Table 2: Results of the sensitivity of the response of the gyroscope

	no bias error	**vibration at the excitation frequency bias**	**bias is a misalignment between elastic and readout axes**
Gyroscope with four Beams	12.5e-18	3.5e-13	2.9e-15
Gyroscope with eight Beams	3.5e-18	8.2e-18	2.5e-16

7. Conclusion

The results of the comparison between the two Gyroscope with four Beams and eight Beams shows Output sensitivity, without bias error does not change sensitivity, But considering the bias, sensitivity of the gyroscope with eight beams will be reduced to a value of 10^{-5} order Compared with Gyroscope with four Beams at the excitation frequency bias ,Also considering the output of bias error for misalignment between elastic and readout axes , sensitivity of the gyroscope with eight beams will be reduced to a value of 10^{-1} order Compared with Gyroscope with four Beams Thus, generally eight beams reduce the sensitivity of the gyroscope bias error And presumably it will improve stability.

REFERENCES

1. Yazdi, N. F., Ayazi, K. Najafi, (August 1998) : Micromachined inertial sensors, Proc. IEEE (86) 1640–1659
2. He ,G., Najafi,K. , (January 2002): A single-crystal silicon vibrating ring gyroscope, in: Proc. 15th IEEE Int. Conf, Las Vegas, CA, pp. 718– 721.
3. Geen,J,A., Sherman.S,J., Chang,J,F., Lewis,S,R . (December 2002) : Single-chip surface micromachine dintergated gyroscope with 50◦/h allan deviation, J. Solid State (Circuits 37)1860–1866
4. Apostolyuk, V., Zbrutsky, A., (1999) : Dynamics of a sensitive element of micromechanical gyroscope Scientific news of the National Technical University of Ukraine (Kiev) no 1pp 114-120
5. Friedland, . and Hutton ,M ,F . (1978) : Theory and error analysis of vibrating-member gyroscope IEEE Transactions on Automatic Control 23pp 545-556
6. Alper ,S,E., Akin ,T., (September 2004); A symmetrical and decoupled nickel microgyroscope on insulating substrate, Sens. Actuators A(115) 336–350.