J. Basic. Appl. Sci. Res., 3(1s)622-632, 2013
© 2013, TextRoad Publication

ISSN 2090-4304
Journal of Basic and Applied Scientific Research
www.textroad.com

Conceptual Design and Simulation of Electric Power Supply System for a Remote Sensing Nano Satellite in LEO Orbit

Ahmad. Mostajabi*, M.Reza. Khorrami Nezhad Shirazi, and Milad. Karimi

Department of Electronic Eng., Islamic Azad University

Received: June 2 2013
Accepted: July 6 2013

ABSTRACT

The purpose of this paper is to review the results of the conceptual design and simulation of electric power supply system for a remote sensing Nano satellite with 9kg weight, average power of 6.86watt, maximal power of 12watt (for the duration of 35 minutes in times of solar eclipse), with unset linear voltage, missioned for 1 year with MPPT method. Multi-junction solar cells are its main source of energy and for energy storage it uses Lithium – Ion batteries. Simulation results for four solar arrayed positioning in light or and in solar eclipse, with a fixed and variable charge are shown.

KEYWORDS: Nano Satellites, Conceptual Design, Subsystem, Electrical Energy, Solar Cells

1. INTRODUCTION

Most of the Nano satellites are dimensionally ranged from 10 to 50 cm & massively 1 to 10kg and has a mission life of about three days to one year. Remote sensing satellites are equipped with sensors such as imaging operators which are to perform imaging and getting statistics from the Earth surface. Designing systems or satellite systems engineering is a process in which the general specifications of a satellite system is designed in various samples. Satellite system simulation is thus an approach to get a better understanding of proposed designs and recommended ideas before they are implemented. Imposing different requirements based on these designs is done in order to improve system performance and verification of that. Also by putting and checking other different circumstances, the relation between installed components can be realized. The benefits of using simulation in such system can be absolutely established. [1], [2]

2. Nano satellites systematic design algorithm

In fig. 1 a schema of selecting process for electric energy supply system of Nano satellites is shown. The design process must continue until reaching characteristics of Nano satellite power subsystem's main parts with some required changes. [3]

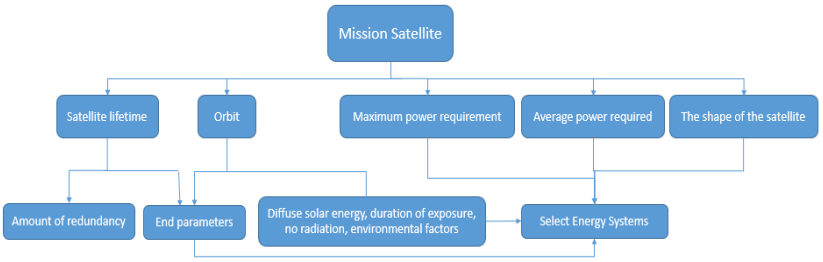

Fig.1. selecting process for electric energy supply system of Nano satellites

This power system is consisted of a solar array, a chargeable battery and a power adjuster (which adjusts the passing power through different sections so the supply line voltage would be controlled). The process and the results of this nano satellites conceptual design and the characteristics of its elements are discussed below.

3. Process of power supply subsystem design for remote sensing Nano satellite

A prototype sample, is provided to design the subsystems of the Nano satellite electric power supply system which in, calculation standards from authoritative satellite design centers have been applied. Details of the design process as regulated are: solar array power system, the DC-DC Converter, designing and maintenance of voltage supply line, drafting charge system, secondary battery and power distribution system. Now with the given design

Corresponding author: Ahmad Mostajabi, Department of Electronic Eng., Khomeini Shahr Branch, Islamic Azad University, Isfahan, Iran. Email address: ahmad.mostajabi@iaukhsh.ac.ir

methods, statistical parametric methods and circuit specifications calculated & presented in in table 1, we started designing a conceptual model of such Nano satellites.

Table 1. Nano satellites circuit parameters[1]

	Characteristic	Symbol	Unit	Amount
1	Orbit type	-	-	LEO
2	Orbit slope	i	deg	98.5941
3	Orbit height	H	Km	800
4	Velocity Nano satellite	V_s	Km/s	6946.42
5	Gravity Constant	μ	Km^3/s^2	398600.4
6	Shade time	T_e	min	35.1326
7	Orbit period	P	min	100.873
8	Lighting time	T_{Light}	min	65.7402
9	Seeing time satellite	-	min	12.4526
10	Lenght lifetime satellite	-	day	365

3.1. Calculating the average power required

Table 2 presents the calculation sample of Nano satellites' power subsystems which is obtained from statistical data. [1]

Table 2. Computing power subsystems [1]

Control and status	**P_w= 0.043 * P_s +0.008**	**0.463**
Temperature Control	P_w = 0.130 * P_s +0.001	1.377
Power Subsystem	P_w = 0.162 * P_s +0.003	1.718
The following power supplies	P_w = 0.061 * P_s +0.180	0.826
Tracking, telemetry and command power subsystem	P_w = 0.330 * P_s -0.004	3.490
Handling the power subsystem	P_w=0.069 * P_s +0.079	0.809
Total amount of average power		8.683

3.2. Designing process for energy storage & output system

For Nano satellites located in LEO orbit, the number of solar eclipse, thus battery charge & discharge, is very high. On the other hand the reduction of size & weight is of quite importance whenever it comes to these kind of satellites. As a result of this latter issue, the battery must be chosen with higher volume & weight density of energy and by considering the advantages of lithium – Ion batteries such as higher density of energy, lower weight, no memory effect compared to NiCd& NiH2, it can be presumed that the Lithium – Ion battery is the best option for the related satellite.

The effective parameters in design are: [2]

. Average power: 8.683watt
. Satellite navigation system: Spiral
. Solar cells: Muti-junction, with the maximum thermal degree of 50 centigrade
. Maximal power: 12watt
. Maximal power duration: 35 minutes (at night)
. PCCS System: MPPT Method
. Solar fields: attached to the body

3.3. Calculating Battery Capacity

Due to the number of charge and discharge cycles required during the satellite mission (one year), which is about 5000 cycles (the exact value of 1 × 14.27 × 365) with respect to fig. 2, the depth of discharge (DOD) 35%, seems to be a safe choice. [7]

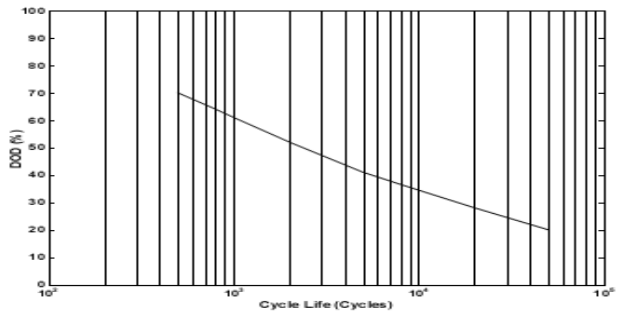

Fig.2. proper discharge depth depending on the life span of batteries for Li- ION

Battery capacity is calculated using the energy required during solar eclipse. Noticing that in the worst conditions, the maximum power of the satellite during eclipse period, the battery capacity, considering Ampere per hour is equal to:

$$C = \frac{w}{v_{bus}} = \frac{P_{av}(t_e - t_p) + P_p t_p}{V_{bus,min} DOD_{60}} \quad (1)$$

For the specified satellite the C=1.435Ah which is calculated using a standard 2 Amps per hour battery, considering the given characteristics above.

3.4. Calculating battery charging duration

The time required to recharge the battery at any period of the orbit (t_{ch}), should be lesser than (t_s) time. To calculate the duration of charging process, the required energy of the battery in solar eclipse periods can be considered:

$$t_{ch} = \frac{P_{av}(t_e - t_p) + P_p t_p}{P_C * \eta} \quad (2)$$

With accordance to the parameters of the satellite, calculated charging time is equal to 48.21 minutes. Notice that:

$$t_{ch} = 48.21 \min \leq t_s = 65.7402$$

At worst situation, 48.21 minutes of the whole 65.7402 minutes of the sunshine duration, is allocated to recharging the battery.

3.5. Measuring the solar arrays [2]

Multi-junction solar cell characteristics at the start of the mission (BOL),is presented in fig. 3.

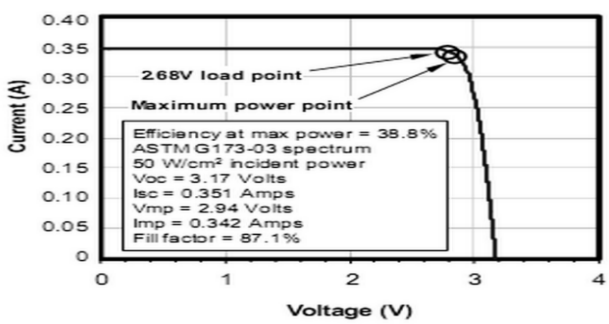

Fig.3. solar cell characteristics "WCA-2300-C3MJ"[11]

3.6. Characteristics of solar cells at the end of the mission (EOL):

For multi-junction solar cells at the end of the 1 year mission, from 0.342 to 0.308 mA, from 2.94 to 2.646 and from 1w to 0.89w will be declined.

3.7. Calculating the number of cells required

To provide the desired voltage and current, series and parallel connection of cells and their ladder combination will be used. According to power line voltage & the power which must be provided by solar cells, the number of series & parallel strings & required cells will can be calculated using the following equations:

$I_{bus} = \frac{P_{sa}}{V_{bus}} = 0.734\ A$ Total current cells (3)

$N_s = \frac{(V_{bus} + V_{cd})}{V_{mp,EOL}} = 4$ The total number of cells in series strings (4)

$N_p = \frac{I_{bus,EOL}}{I_{mp,EOL}} = 3$ The total Number of parallel strings (5)

The total number of cells required includes charging circuit cells and original cells.

$$N_{sa} = (N_p * N_c) + (N_{cp} * N_{cs}) = 4(N_L N_w) \quad (6)$$

N_L and N_w, orderly are the number of Longitudinal & Latitudinal cells in each of the four arrays mounted on the four sides of the satellite.

$$N_{sa}^{tot} = 48 = 4(3 * 4) \quad (7)$$

Finally for the explained satellite N_L and N_w would be 4 and 3.

4. Designing Power management system

Designing Power Management System can be divide into drafting the following subsystems:

A) Solar Array Power Control

B) Setting the bus voltage

C) Charging the secondary battery

4.1. Designing Solar Array Power System

Two general methods are used in designing control system and power management setting. Direct Energy Transfer (DET) & Maximum Power Pointing (MPPT).In DET Method, the solar energy is transferred into loads, with no interference of regulators & series converters. In this case the maximal power of cells cannot be produced & sometimes power production is higher than power usage that must be wasted. MPPT, which is essentially a DC-DC converter is placed in series with the solar array & dynamically adjusts the operating point of the solar array, so that the absorbed power be in relation with the amount needed by the satellite. This method is used whenever the power of satellite is less than 500watt or in places where in accordance to temperature changes or application of the satellite, the power would change significantly.[7]

4.2. DC-DC Converter

This kind of converter is widely used in the photovoltaic systems, as an interface between the solar cell and the load. The converter must be adjusted in order to successfully transfer the maximum solar cells power to the charge. For this reason, the efficiency of the converter becomes very important to us, in order to reach the target. In fig. 4 all the reducing, reducing & increasing, decreasing-increasing converters have been discussed based on their efficiency. As it is clear in fig. 4, the efficiency level of the reducing converter is larger than others. Thus it is assumed that choosing the reducing converter would be the best choice.

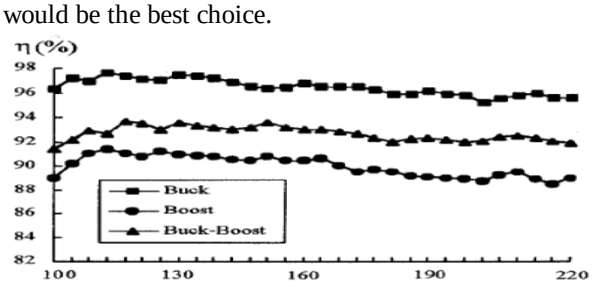

Fig.4. efficiency of buck, boost& buck-boost converters

4.3. Creating & setting of the supply line voltage (bus setting)

Due to the matter of using MPPT for controlling & maintaining the power, the best way to adjust the bus voltage, is not to adjust bus. Because other methods are not suitable for use with an MPPT (due to low efficiency & EMI) which results in smaller volume & size. It should also be noted that in the matter of large alternation of bus voltage, using the regulator switch step up/step down as a unit of power management is necessary & considering their appropriateness & availability, there would be problem, but at all. [7], [11]

4.4. Secondary battery charger design

If mission duration is less than five years, the technology used to charge, will be parallel charging technique. This technique involves the charging of all batteries in parallel during the light period, by using just a single charge unit. Since the satellite has a lifespan of one year, we strongly recommend this parallel charging technique, which dramatically reduces the weight & volume of the electrical energy system. Additionally, to avoid uneven charge, using temperature sensors on batteries and switches, are crucial in order to stop each battery. [3],[7]

4.5. Designing power distribution system

Practically, due to the fact that satellite subsystems need various levels of voltage with positive & negative polarity, using converters, regulators & reverse articulators of extra voltage, will be taken into consideration. To perform these operations, we can utilize both centralized & decentralized distributing systems. In decentralized distribution system, since each subsystem uses its own operator, basically power lines with none adjusted voltage will be exploit. Unlike the decentralized distribution system, the centralized one puts all the regulators in one place, & all the voltages required by the power distribution unit will be dedicated to other subsystems. This system is designed to supply electrical power in a more sophisticated way but at the same it enables simpler design for subsystems which lessen the concerns about required power for them. The centralized distribution system is recommended for tiny satellites with the power of less than 100watt. [3],[6],[7]

5. Results acquired from the conceptual design

Depending on the satellite mission, construction, manufacturing costs, designing process require different technology and other parameters, which must be decided and managed by the design team.

Table 3. Designed Nano satellite's electrical power supply system parameters in LEO orbit. [2]

	Characteristic	Unit	Amount
1	Average power	Watt	8.68
2	The maximum power	Watt	12
3	Array type	Multi connection	GaInP/GaAs/Ge Efficiency %38
4	Array power capacity	Watt	25.88
5	Area array	m^2	4*0.0357
6	Array weight	Kg	0.3473
7	Battery LI-ION	Ah	1.8
8	Battery weight	Kg	0.38
9	Number of Batteries	-	3
10	DOD	-	%35
11	Line voltage (Uncelebrated)	Volt	10.5

6. The process of simulating the designed Nano Satellite

6.1. The overall shape & parameters of the power supply system

The overall system can be divided into several smaller subsystems. These subsystems include a PV module, Lithium – Ion Battery type, Charger, shunt resistance DC-DC converter, electricity load, MPPT & some basic keys. In fig. 5, the diagram block is mentioned. [13]

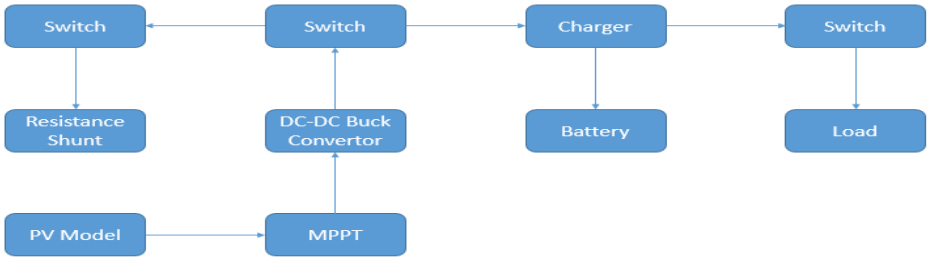

Fig.5. Block diagram of system design

6.2. Maximal Power Pointing (MPPT)

Solar cell efficiency is highest, when the maximum it works at maximum power. However, they cannot perform at this level without supervision, due to many factors. Power produced by the solar cell depends directly on main factors such as solar radiation, cell temperature, and the amount of electricity current attached to it, where the temperature and solar radiation varies based on timeline thus varies the maximal power point. By using MPPT Algorithm, the maximal power point is enabled to increase the received amount of power by 20%. In Fig. 6, the flowchart of observation and pointing method is completely defined. It is divided into two categories which are presented as radiation ring & temperature ring. [15]

6.2.1. Radiation Ring

According to the specifications of solar arrays, t can be shown that by increasing exposure, the short current will be increased either and the MPPT will change course toward higher voltages. In radiation ring, besides controlling, MPPT avoid system failure in time of negative impedance. [15], [16]

6.2.2. Temperature Ring

It starts working whenever the alteration of radiation of low count. According to the fact that specifications of solar arrays variation, depends on temperature, thus MPPT will change based on the same thing, which allows us to point out. [15], [16]

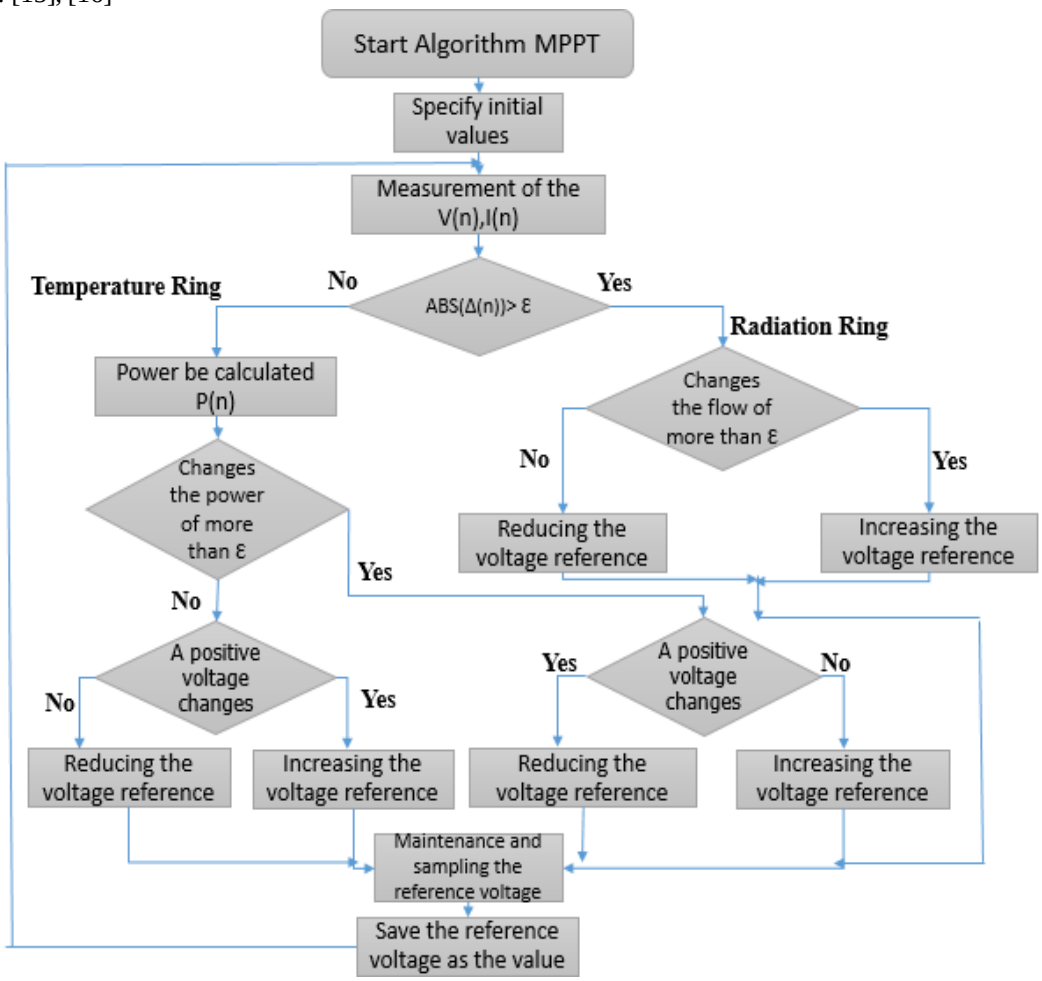

Fig.6. Flowchart Completed observation and follow-up

6.3. Sample battery

The battery is lithium – Ion, which has been chosen based on simulative sample existed in (Sim Power Systems Library). It performs as charging & discharging. The current is negative whenever the battery is charged & is positive whenever it isn't.

6.4. Reducing DC-DC Converter

Reducing converter is a converter which reduces the output voltage. Fig. a-7 is the converting circuit when the switch is closed and fig. b-7 is when the switch is open. At steady state, the Duty Cycle equation is as equation (8).

$$D = Vo/Vd \quad (8)$$

Amount of D varies from 0 to 1. Output voltage increases by increase of D. when D is the highest value; the output voltage has its maximum value. The predecessor is achieved from equation (9)

$$L > Lmin = (1-D)R/2f \quad (9)$$

The output voltage is controlled by D and will never be more than input voltage. [15]

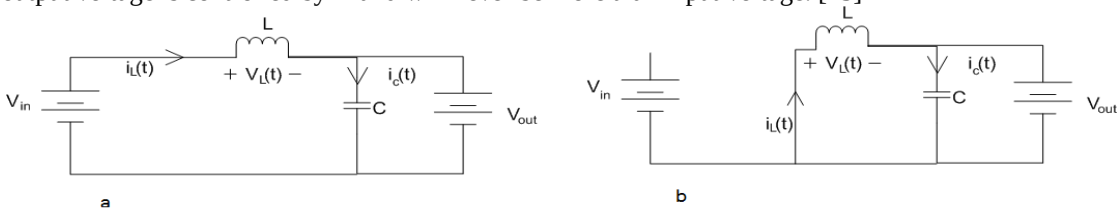

Fig.7. equivalent circuit of reducing converter. a: with closed switch b: with open switch.

6.5. Load

For the load related section, there have been used of several resistances. And to change the load some switches are placed. So that in different time zones the load will change with these switch being on and off. Considering that average power 8.683 watt and the maximum power of 12 watt **(**for the duration of 35 minutes in times of solar eclipse), a resistance of 16.58 ohms for average power and a resistance of 12 for maximum power amount is considered.

6.6. Charger

It is necessary to use an optimal charger in order to avoid additional charge or high reduction of battery charge level which later causes life damage & reduces the lifetime. Usually in a cycle, the discharge rate must not be lower than 30% & its charge shall not be more than 100%. In here the selected battery have a capacity of about 1.5 percent, higher than the average required one. As a result, the charging level rarely gets to 40%. The charging system used in this design, includes two switches, on at the battery terminals (the A switch) & the other placed at load (the B switch). The A switch which is placed at PV Module, opens whenever the battery charge level reaches higher than 97% & continue to be open till charge level reduces 75%. The B switch on the load side opens whenever the charge level reduces to 35% and continues to be open till the charge level reaches 80% again. [1]

Table 4. Correct moods keys

Status	B’	B	Status	A’	A
SOC ≤ 35%	0	0	SOC ≥ 97%	0	0
SOC ≤ 35%	1	0	SOC ≥ 97%	1	0
35% < SOC< 80%	0	0	75% < SOC< 97%	0	0
35% < SOC< 80%	1	1	75% < SOC< 97%	1	1
SOC ≤ 80%	0	1	SOC ≤ 75%	0	1
SOC ≤ 80%	1	1	SOC ≤ 75%	1	1

7. Simulation

For set up, the primary value of battery charge of 65% and for 15 periods is shown. The simulation is done by 90785.7 steps of 1 second duration. Which is actually 15 periods of 100.873 minutes. In fig. 8 simulated diagram block is shown. Which include temperature and radiation inputs, solar panel, Maximal Power Pointing (MPPT), Reducing DC-DC Converter, key controller, charger and load. In fig. 8, PV with a current source, with a voltage source and load with several parallel resistances is modeled. Current source makes a current output which itself is a result of output current of reducing converter. The voltage source which represents the battery is dependent to output voltage and amount of charge which comes from battery block. All keys are controlled by “switch controller” and are conducted through “Controller and Shunt protection” block. [14]

7.1. Solar panel and Maximal Power Pointing (MPPT)

Solar panel and maximal power pointing is modeled by composition PV and MPPT which is in find-mppt block. This block is the type of EmbeddedMATLAB Function. And is based on the written function in MATLAB's MFile. The two amounts of temperature and radiation are applied to system as inputs. Solar panel section based on solar datasheet and for solving current equation through Newton calculation and 5 times of repetition, this ring is used. According to maximal power pointing and calculated current algorithm through Newton repetition way, the maximal current and maximal voltage is reached.

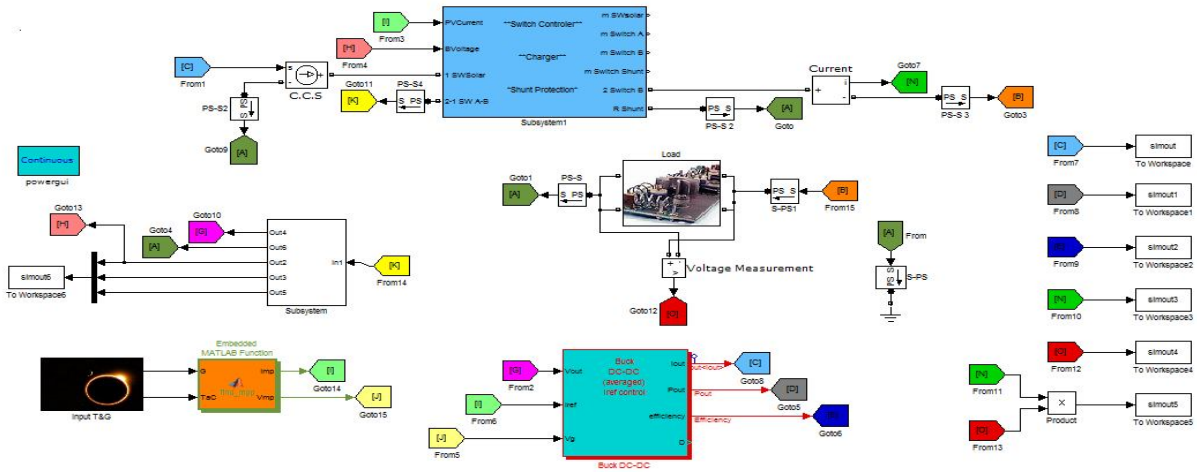

Fig.8. subsystem simulated diagram block

7.2. Reducing DC-DC Convertor

Fig. 9 is reducing convertor subsystem along with input current controller. Voltage and current maximal (V_{MP} ,I_{MP}) are reached through "find-mppt" block, along with battery voltage (Vbat) are considered as converter input. And the output current (Iout), output power (Pout) and revenue are considered as output. Output current is used for controlling the current source. Also this block's duty is to match the PV voltage with battery voltage. It also is considered as input current controller.

7.3. Battery

The battery section is selected based on Simulink sample, related to (SimPowerSystems). (14)In fig. 10, battery masked subsystem is shown

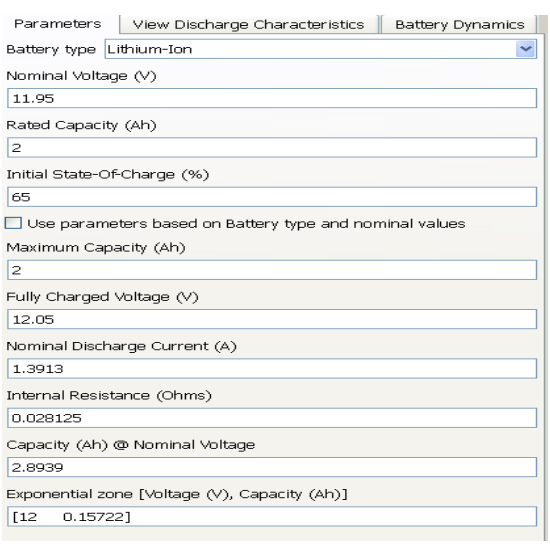

Fig.10. battery masked subsystem

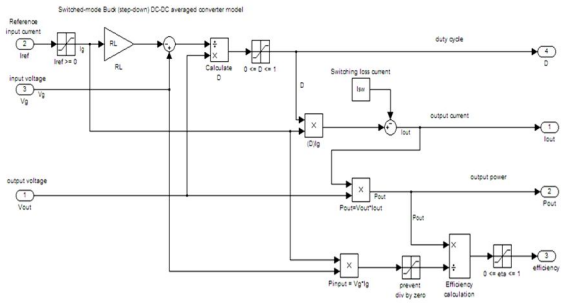

Fig.9. Reducing converter subsystem

7.4. Charge and switch controllers

To extend battery life, we should manage the charge and discharge methods. The charger related sections consists of two A and B parts. switch A in PV module section, when the charge exceeds 97%, removes the solar array from the battery in order to prevent excessive battery charge, until the amount reaches 75% this switch will stay open, and when it reaches 75% it closes in order for the battery to be charged by the array. Switch B in load section is to prevent excessive discharging. If the battery charge goes below 35%, this switch will open in order for the battery to reach acceptable charge amount. (80%). And then it connects to the system. Solar switch is for when the array places in the eclipse section. In this state, solar cells act like a diode and as a consumer they take the current which is cause taking the power out of battery. To prevent this a zero comparing block is used. When the cell current is negative which means when the current flows from battery towards cell, this switch will open and remove the array from the battery. So it wouldn't take the power out of battery. To enter different amounts of (SOC), to control the switches fig. 11 system is used. Shunt Function is used in order to get rid of extra current, when battery is fully charged. [14]

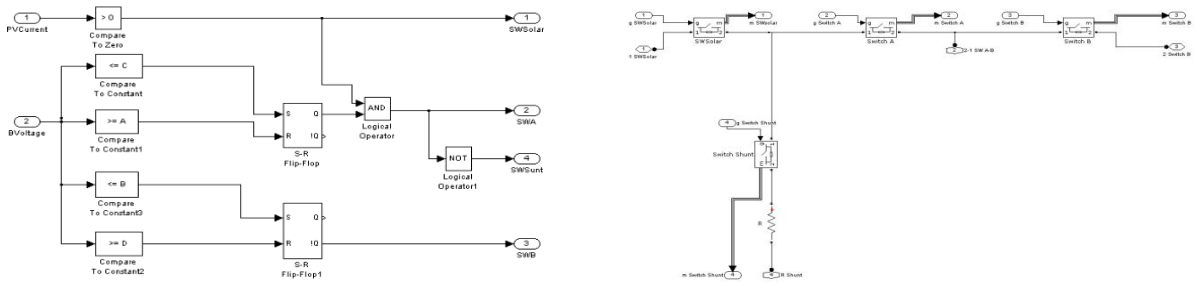

Fig.11. diagram block in switch controlling section

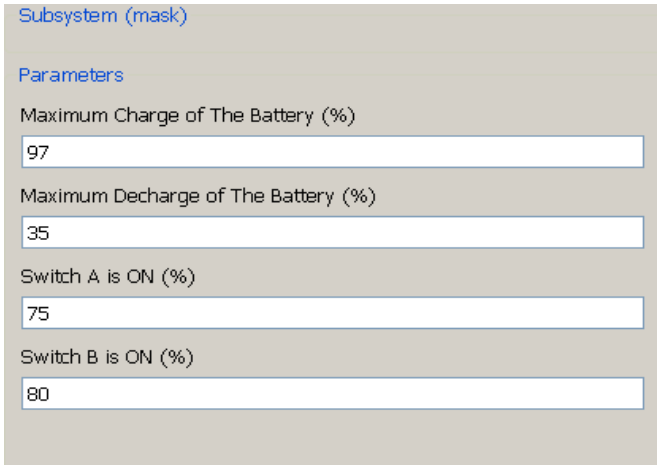

Fig.12. masked subsystem for controlling switches

7.5. Load

Load section, is modeled by resistance and other amounts that have been previously mentioned. When needed they become on and off so there will be shifty load. In fig. 13 a sample load is shown. For average power a residence of 16.584 ohm and for the maximal power a resistance of 12 ohm was used. (The maximal power for the duration of 35 minutes in times of solar eclipse is applied to the circuit). [14]

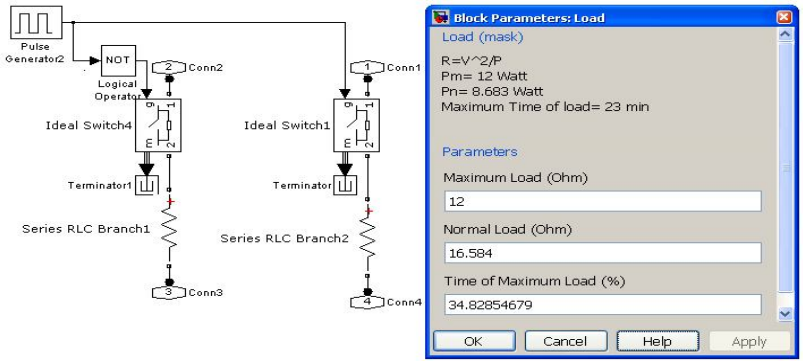

Fig.13. load diagram block

7.6. Temperature and radiation input

Temperature and radiation input in simulation are shown by (G) and (TaC), and are related to temperature and radiation changes. And its output forms the temperature and radiation input signals of PV module cell. [14]

8. Simulation Results

In this section the results of the performed simulation and examination and compare of obtained outputs from different sections are investigated.

8.1. Characteristics of load voltage, load current and load consuming power

Fig. 14 is related to voltage output, load terminal current and also load's consuming power. Load voltage is about 12 volts. In the initial part of each cycle in which the slope is increased, is because in radiation time in which the battery is being charged, it's voltage is also increased, which after the battery is fully charged, load voltage decreases with a slow slop. Considering the current changes, it is seen that at the beginning of the cycle in which the average power is used, the output power is also 8.73 watt and in the last 35 minutes (2100 seconds) of the cycle the maximal power which is 12.02 watt is used.[14]

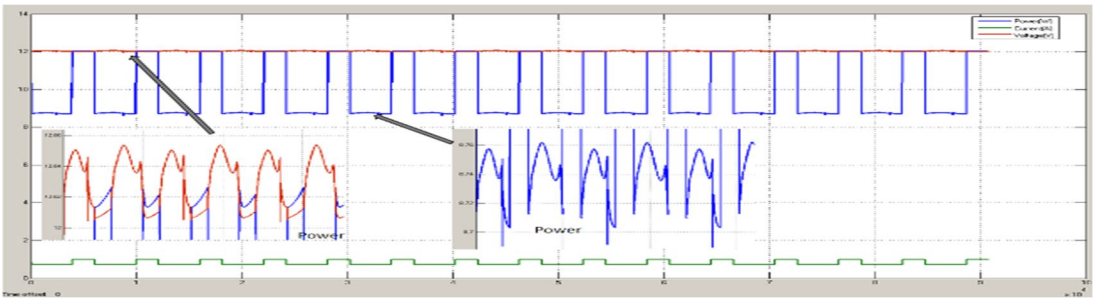

Fig.14. Characteristics of load voltage, load current and load consuming power

8.2. Characteristics of battery current and battery charge amount

According to fig. 15, battery current characteristic is charged per negative battery current. And when the current is positive, discharge takes place, which according to battery charge characteristic and battery current it is clearly viewed. Once the battery is fully charged with current of about 0.75 and with average power consuming and about 1 ampere, it is discharged with the maximal battery power.[14]

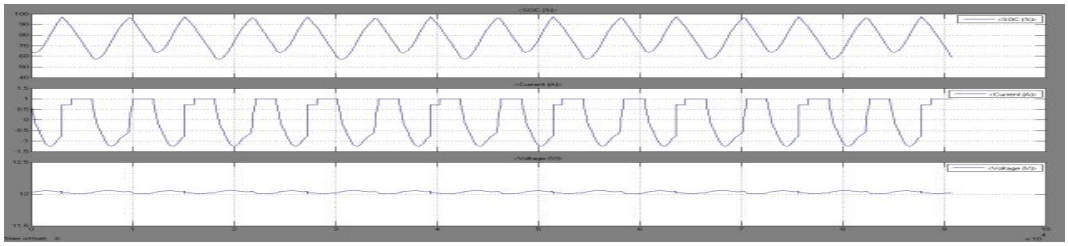

Fig.15. Characteristics of battery current and battery charge amount

8.3. Output current, output power and converter output

According to fig. 16, current and power outputs had reached their maximal amount by high slop. And after that with a slow slope they decrease and through the radiation cycle they decrease by high slope. The below figure is related to convertor output that during radiation its average is 96%. Also during eclipse its output is zero.

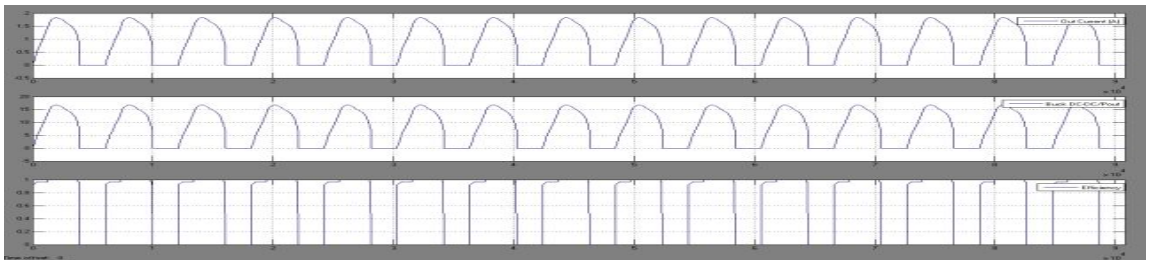

Fig.16. Output current, output power and converter output

9. Conclusion

In figures: 14, 15, 16 the results of the performed simulation and examination of obtained outputs from different sections and comparing them with primary data of conceptual design showed that we have reached conceptual design results with error of less than 2%.

REFERENCES

1. riyahipour, A.,Mostajabi, A.,Sadoghi, A.R.(2010): Conceptual design and simulation of electric power supply system for a Micro satellite in LEO orbit, Malek Ashtar university,Esfahan.
2. Darabi, A., Mirshams M., "Design of a Mykrvmahvarh academic (scientific - research)," Master's thesis, Nasir Toosi University, Summer 2005.
3. Riahi, A., A. Sadoghi, "Conceptual design of the electrical power supply system on micri satellite in the LEO circuit," Thirteenth Conference on Electrical University, 2010
4. Y. Chang, K. Hwang, S. Kang, ‘’SEDT (System Engineering Design Tool) development and its application to small satellite conceptual design’’ ,Science Direct,2007
5. Sherkat masom,M.A, "Electric Energy System of Satellites", Iran University of Science and Technology, 2002.
6. Wiley J.Larson ,James R.Wertz ,”Space Mission Analysis and.2005 ,Design” , MicroCosm Press, Third Edition.
7. Bolandi, H.,"Introduction to Satellite Design" Iran Electronics Industries, 2008, pp. 1-5
8. Mukund R. Patel “SPACECRAFT POWER SYSTEM” 2005.
9. Samina Asif ,"Evolutionary Computation Based Multi-Objective Design Search And Optimization Of Spacecraft Electrical Power Subsystems" ،University Of Glasgow, September2008.
10. R.bin roslan "A muximum power point tracking convertor for photovoltaic” 2009.
11. Riyazieat, M., Mathematics Majid, Conceptual Design Nanvmahvarh Telecom Power Systems, Thesis, 1388
12. http://www.spectrolab.com
13. Tyson DenHerder,"Desigen and simulation of photovoltaic super system using simulink , "California Polytechnic State University،2006.
14. Akihiro Oi ,"Desigen And Simulation of photovoltaic water pumping system" , September 2005.
15. Ghaedi ,M., "Design and simulation system to get the maximum power from the solar cells", Thesis, Malek Ashtar University, Fall 2009
16. A.Yafaaoui.,B.Wu and R.cheung ,"Implementation of maximum power point tracking algorithm for residential photovoltaic system" , June2007.