J. Basic. Appl. Sci. Res., 3(1s)396-405, 2013

ISSN 2090-4304
Journal of Basic and Applied Scientific Research
www.textroad.com

BER Analysis of OFDM Systems Communicating over Frequency-Selective Fading Channels

Mahbubeh Bahryni[1*], Ali Rafiee[2]

[1]Department of Communication, Science and Research Branch, Islamic Azad University Kermanshah, Iran
[2]Department of Communication ,Kazeroon Branch, Islamic Azad University Kazeroon, Iran
Received: June 10 2013
Accepted: July 11 2013

ABSTRACT

This paper presents a channel estimation scheme for multiple-input multiple-output with orthogonal frequency-division multiplexing (MIMO-OFDM) in frequency selective fading channels. According to this, with investigating the channel estimation method, we will design optimum training courses for these systems and will introduce related comparative methods based on LMS algorithm.

The estimation of channel at pilot frequencies is based on Least Square and Least Mean Square channel estimation algorithm. We have compared the performances of channel estimation algorithm by measuring bit error rate vs. SNR with QPSK modulation scheme. LS method offers accurate estimation of channel. In this paper LS method was used for initial channel estimation. For improving accuracy of channel estimation, LMS algorithm was added to receiver which includes a feedback of output and improves the BER performance of system.The results of the performed simulations show the application of the mentioned algorithm in systems based on OFDM.
KEYWORDS: multiple-input multiple-output (MIMO) systems, orthogonal frequency division multiplexing (OFDM), channel estimation, LMS algorithm, LS estimator.

INTRODUCTION

In a traditional wireless communication system, provided that the bandwidth is constant, there is no possibility of increasing the sending rate of information. In this kind of situation, only diversity methods can be used to improve the quality of revealing. In designing communication systems, bandwidth, information sending rate and software-hardware complexities are the important parameters. To expand the new generation of communication systems, methods such as MIMO, OFDM and integrating them together as MIMO-OFDM, are suggested. In recent years, multiple-input–multiple-output antennas combined with orthogonal frequency-division multiplexing (OFDM) have been widely studied in wireless communications because they can provide high data rates and are robust to multipath delay. Channel parameters are needed to coherently decode the transmitted signal and to combine the diversity branches.

OFDM is used in numerous wireless transmission standards nowadays (DAB, DVB-T, WiMAX IEEE 802.16, ADSL, WLAN IEEE 802.11a/g, Home Plug AV or DS2 200 aka "Home Bone"). The OFDM modulation transforms a broadband, frequency-selective channel into a multiplicity of parallel narrow-band single channels. A guard interval (called Cyclic Prefix CP) is inserted between the individual symbols. This guard interval must be temporally long enough to compensate for jitter in the transmission channel. Transmitted OFDM symbols experience different delays through the transmission channel. The variation of these delays at the receiving location is called jitter. The appearance of inter-symbol interference (ISI) can thus be prevented. It has been shown in that OFDM can be favorably combined with multiple antennas on the sending side as well as the receiving side to increase diversity gain and/or transmission capacity in time-varying and frequency-selective channels.

The high intrinsic resistance of OFDM against the ISI event and its suitable function against fading destructive event, besides the high rate of information sending of MIMO, creates a very efficient complex in accession toward the fourth generation of wireless communication's demands. Like OFDM systems, the MIMO-OFDM systems have a great deal of sensitivity toward synchronization errors. Again, according to the increase in number of unknowns, estimating the channel in these systems are more complex than estimating channel in one antenna systems [1].

Several CE techniques have been proposed to mitigate inter channel interference (ICI) in OFDM systems. In [2], the least square (LS) CE has been proposed to minimize the squared differences between the received and estimated signal. The LS algorithm, which is independent of the channel model, is commonly used in equalization and filtering applications. But the statistics of channels in real world change over time and inversion of the large dimensional square matrix turns out to be ill-conditioned. To further improve the accuracy of the estimator, Wiener filtering based iterative CE has been investigated [3], [4]. However, this scheme also requires high complexity and

***Corresponding author:** Mahbubeh Bahryni, Department of Communication, Science and Research Branch, Islamic Azad University Kermanshah, Iran. e-mail: mahbubehbahryni@yahoo.com ; phone:+98917 1864484

knowledge of channel correlations. In this paper, least (LS) square and least mean squares (LMS) adaptive channel estimator are described for MIMO OFDM systems.

An introduction of OFDM-based systems

The necessary steps carried out in an OFDM system are shown in Figure.1.In OFDM, a signal of wider bandwidth is divided in smaller bandwidth signals to have flat fading effect to avoid Inter-Symbol Interference (ISI). Then IFFT is applied to these sub-carriers and CP is added to each sub-carrier to avoid ICI. After receiving the signal, before applying FFT operation, first CP is removed and then we have the following received symbols over sub-carrier [5]

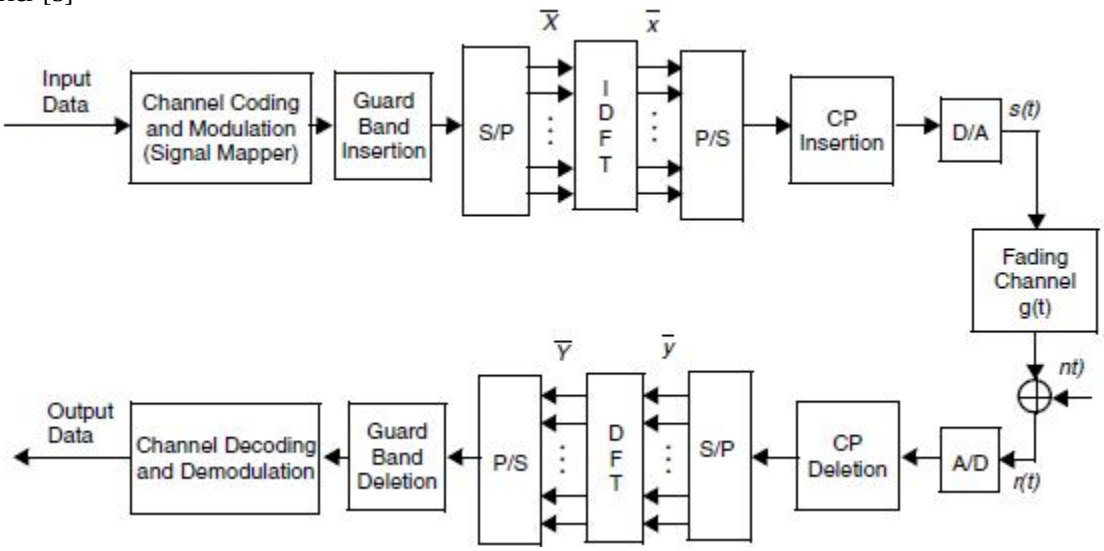

Fig.1: OFDM system model

Channel estimation is an important component of a communication system. With the information of the channel impulse response, and/or model parameters of a channel, one can perform the optimal symbol detection or construct a equalizer, or predict the channel.

In OFDM systems, modulated bits are distorted during transmission through the channel since the channel introduces amplitude and phase shifts due to frequency selective and time-varying nature of the wireless channel. In order for the receiver to acquire the original bits, it needs to take into account these unknown changes. The receiver applies either coherent detection or non-coherent detection to recover the original bits. Coherent detection [6] uses reference values that are transmitted along with data bits. The receiver can estimate the channel only at reference value locations. The entire channel can then be estimated by using several interpolation techniques [6], [7]. Non-coherent detection [6], on the other hand, does not use any reference values but uses differential modulation where the information is transmitted in the difference of two successive symbols. The receiver uses two adjacent symbols in time or two adjacent sub-carriers in frequency to compare one with another to acquire the transmitted symbol. To improve OFDM systems performance, channel estimation is needed. Accurate channel estimation algorithms can be applied in OFDM systems to allow coherent detection, thereby improving system performance. Diagram block of one kind of MIMO-OFDM systems, is shown in the figure2.

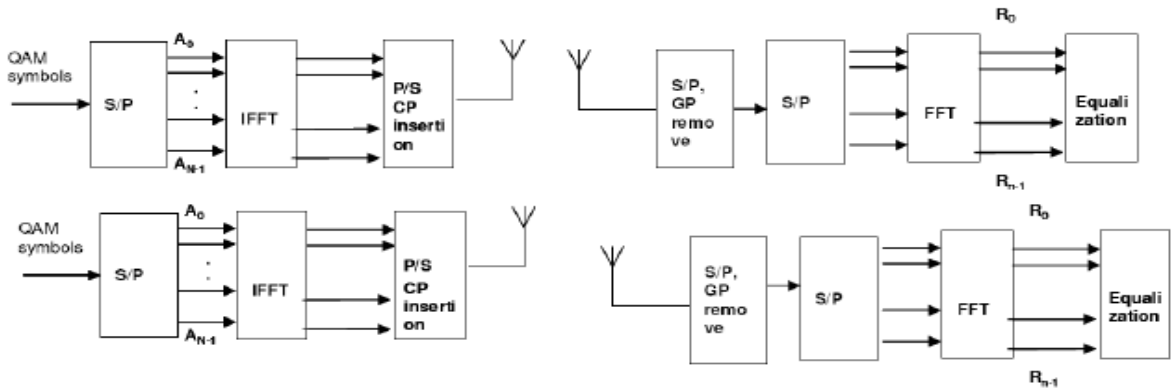

Fig.2: Displaying a MIMO-OFDM system.

According to the figure, the information in each antenna is sent after IDFT actions and addition of (CP) cyclic prefix. Each receiver antenna receives sum of noises and signals sent by the transmitter's antenna. In each receiver antenna the revealing is done after removing CP and DFT actions.

Channel estimation

The major considered estimating channel methods are as follows:

A. Using educational sequence methods

By putting samples in the sent symbol which are known by the receiver, we can reach the channel's domain which is multiplied by sum symbol and shift results. Now by using the channels reached coefficients, we can reveal the rest of symbol samples which are the desired inputs and the receiver is unaware of them [8].

B. Blind methods

In this method which has no need of educational samples, using the covariance matrix, the receiver estimates the coefficients of channel and reveals the sent inputs by using them [9].

C. Half blind methods

In this method the between up between properties of the two previous methods are used [10].

LS channel estimation in SISO-OFDM systems

The combination of orthogonal frequency division multiplexing (OFDM) with space-time coding has received much attention recently to combat multipath delay spread and increase system capacity . Channel parameters are needed in order to coherently decode the transmitted signal. Least square (LS) channel estimation for MIMO-OFDM systems has been addressed in . But if the multipath are not sample-spaced, the well known leakage problem for DFT based channel estimation . induces an irreducible error floor for estimation error. To reduce this error floor, more taps have to be used, which not only increases computational complexity but also makes estimation problem more ill-conditioned and thus enhances noise. As an alternative, channel estimation algorithm based on parametric model has been proposed in and extended to MIMO-OFDM in .

Channel information is required at receiver for signal detection. However, There are different methods of channel estimation such as pilot aided (Li, 2002) and blind (Gao and Nallanathan, 2007) approaches, the first method is chosen as a channel estimation method in this study due to its less complexity. According to sampling theory (Oppenheim and Schafer, 1999), Pilots are inserted equal-spaced among subcarriers in frequency domain at transmitter, which are known at receiver and will be extracted to estimate channel at pilot subcarriers and interpolation is implemented for channel estimation in another subcarriers. In the analysis, channel is estimated with LS (Coleri *et al*., 2002) method at pilots, then linear interpolation is used to complete the estimation (Coleri *et al*., 2002; Hsieh and Wei, 1998). **Receiver designing:** At the receiver, nr × nt sets of extracted received pilot tones are used for channel estimation, which LS method is chosen due to its simplicity.

The OFDM system based on pilot channel estimation is given in Figure 3. The binary information is first grouped and mapped according to the modulation in "signal mapper". After inserting pilots either to all sub-carriers with a specific period or uniformly between the information data sequence, IDFT block is used to transform the data sequence of length N {X(k)} into time domain signal {x(n)} with the following equation:

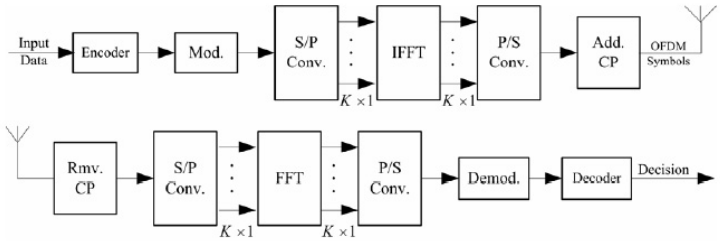

Fig.3: Displaying a OFDM system

$IDFT: x(n) = \frac{1}{\sqrt{N}} \sum_{k=0}^{N-1} X(k)\, e^{j\frac{2\pi}{N}kn} \;;\; n = 0, \dots, N-1$ (1)

where N is the DFT length.

Following IDFT block, guard time (cyclic prefix(cp)), which is chosen to be larger than the expected delay spread, is inserted to prevent inter-symbol interference. This guard time includes the cyclically extended part of OFDM symbol in order to eliminate inter-carrier interference (ICI). The resultant OFDM symbol is given as follows:

$s^{cp}(n) = \frac{1}{N} \sum_{K=0}^{N-1} X(k) e^{j\frac{2\pi}{N}k(n-Ncp)} \;; n = 0, \dots, N + Ncp - 1$ (2)

Then vector r rate in the presence of carrier frequency offset(Δf) is:

$r^{cp}(n) = e^{j2\pi\Delta fn} \times s^{cp}(n) * h(n) + Z(n);\; n = 0, \dots, N_s - 1$ (3)

With eliminating cp and doing a series of operations ,we have:

$r(n) = e^{j2\pi\Delta f(n+Ncp)} \frac{1}{\sqrt{N}} \sum_{k=0}^{N-1} X(K) \sum_{L=0}^{L-1} h_L\, e^{-j\frac{2\pi}{N}kL} e^{j\frac{2\pi}{N}kn} + Z(n)$ (4)

Where Z (n) is White Gaussian Noise with an average of 0 . The output of the receiver is as follows:

$y(n) = \frac{1}{\sqrt{N}} \sum_{n=0}^{N-1} r(n) e^{-j\frac{2\pi}{N}kn} \;; k = 0, \dots, N-1$ (5)

Result

$y(n) = e^{j2\pi\Delta fNcp} \sum_{i=0}^{N-1} x(i)\, H(i) \delta_{i,k} + Z(k)$ (6)

And

$\delta_{i,k} = \frac{1}{N} \sum_{n=0}^{N-1} e^{j\frac{2\pi}{N}n(CFO+i-k)} = sinc\,(CFO + i - k) e^{j\pi(CFO+i-k)}; i, k = 0, \dots, N-1$ (7)

The LS estimate of the channel can be obtained as:

$$\begin{bmatrix} \hat{H}(k_0) \\ \hat{H}(k_1) \\ \vdots \\ \hat{H}(k_{L-1}) \end{bmatrix}_{L\times 1} = \begin{bmatrix} 1 & e^{-j\frac{2\pi}{N}k_0} & e^{-j\frac{2\pi}{N}2k_0} & \dots & e^{-j\frac{2\pi}{N}k_0(L-1)} \\ 1 & e^{-j\frac{2\pi}{N}k_1} & e^{-j\frac{2\pi}{N}2k_1} & \dots & e^{-j\frac{2\pi}{N}k_1(L-1)} \\ \vdots & \vdots & \vdots & \ddots & \vdots \\ 1 & e^{-j\frac{2\pi}{N}k_{L-1}} & e^{-j\frac{2\pi}{N}2k_{L-1}} & \dots & e^{-j\frac{2\pi}{N}k_{L-1}(L-1)} \end{bmatrix}_{L\times L} \times \begin{bmatrix} h_0 \\ h_1 \\ \vdots \\ h_{L-1} \end{bmatrix}_{L\times 1} \quad (8)$$

And

$$\underline{H}_{L\times 1} = [WL]_{L\times L} \begin{bmatrix} h_0 \\ h_1 \\ \vdots \\ h_{L-1} \end{bmatrix}_{L\times 1} \quad (9)$$

$\hat{\underline{h}}_{L\times 1} = \underline{W}L^{-1}_{L\times L}\, \underline{H}_{L\times 1}$

$\Longrightarrow \hat{\underline{h}}_{L\times 1} = \underline{W}L^{-1}_{L\times L}\, \underline{y}(k)_{L\times 1} / \underline{X}(k)_{L\times 1} \;\; if: k = piLot$ (10)

The channel response at the kth sub-carrier estimated from the previous symbol {H_e(k)} is used to find the estimated transmitted signal {X_e(k)}.

$\hat{x}(k) = \frac{y(k)}{\hat{H}(k)}, k = 0, 1, \dots, N-1, \;\; k \neq k_0, k_1, \dots, k_{L-1}$ (11)

$X(\tilde{k}): \tilde{k} \in pilot \;\Longrightarrow H(\tilde{k}) \cong \frac{y(\tilde{k})}{x(\tilde{k})} \;;\; \tilde{k} = 0, \dots, L-1$ (12)

LS channel estimation in MIMO-OFDM systems

For a 2*2 MIMO-OFDM channel, the impact response under the channel between ith transmitter antenna and jth receiver is represented by $h_{i,j}$[11]:

$$H\ (K) = \sum_{L=0}^{L-1} h_L\, e^{-j\frac{2\pi}{N}KL}\ k = 0, \dots, N-1 \qquad (13)$$

In the receiver, the received signal under the kth carrier after the Fourier transform is:

$$yj(K) = \sum_{i=1}^{MT}\big(Xi(k)Hi,j(k)\big) + Zj(k) \qquad (14)$$

Where M_T is the number of transmitter antennas, $z_j(K)$ represents White Gaussian Noise with an average of 0 for the jth receiver antenna in the kth sub-carrier. And for a 2*2 MIMO-OFDM system we have:

$$\underline{y_1}_{N\times 1} = \begin{bmatrix}\underline{X_1} & \underline{X_2}\end{bmatrix}\underline{WL}\,\underline{h_1} = \underline{A}_{N\times 2L}\underline{h_1}_{2L\times 1} + \underline{Z_1}_{N\times 1} \qquad (15)$$

,

$$\underline{y_2}_{N\times 1} = \begin{bmatrix}\underline{X_1} & \underline{X_2}\end{bmatrix}\underline{WL}\,\underline{h_2} = \underline{A}_{N\times 2L}\underline{h_2}_{2L\times 1} + \underline{Z_2}_{N\times 1} \qquad (16)$$

Where:

h1=[h11;h21] , h2=[h12;h22] (17)

And $\underline{WL}$ is a matrix N × L consisting of all $e^{-j\frac{2\pi}{N}K_L L}$.
That in the end Estimated channel coefficients is as follows:

$$if: \tilde{k} \in pilot_{2L} \rightarrow \underline{\hat{h}_1}_{2L\times 1} = A^{-1}(\tilde{k})y_1(\tilde{k})\ , \underline{\hat{h}_2}_{2L\times 1} = A^{-1}(\tilde{k})y_2(\tilde{k}) \qquad (18)$$

LMS channel estimation

For improving the quality of channel estimation, different iterative algorithms are available, such as EM (Xie and Georghiades, 2003), RLS and LMS (Haykin, 1996), among them LMS is chosen due to its less complexity comparing with other methods and its acceptable performance. Also estimation in each iteration, can be used as side information and feed back to system to achieve better result in next iteration. For less complex LSE requiring no matrix inversion, LMS algorithm is proposed for the solution of Wiener-Holf equation, for which statistical information of the channel and data may be required for better performance. The necessary steps carried out in LMS channel estimation are given below:

1- Initially the channel is estimated by using LSE technique, giving $\widehat{H}_{LS}[n]$.

2- After finding the coefficients, the estimation of the channel becomes

$$\widehat{H}_{LMS}[n] = \widehat{W}^H[n]\widehat{H}_{LS}[n] \qquad (19)$$

Where

$$\widehat{H}_{LS}[n] = \Big[\ \widehat{H}_{LS}[n]\widehat{H}_{LS}[n-1] \dots \widehat{H}_{LS}[n-1+M]\Big] \qquad (20)$$

Where M is LMS filter length.

3- Error at iteration n is given by

$$E[N] = \widehat{H}_{LS}[n] - \widehat{H}_{LMS}[n] \qquad (21)$$

4- Co-efficient are updated according to

$$\widehat{W}[n+1] = \widehat{W}[n] + \mu\widehat{H}_{LS}[n]E^*[n] \qquad (22)$$

Where μ is the adjustable step-size parameter.

5- Error given by weight vector is

$$\epsilon[n] = W[n] - \widehat{W}[n] \qquad (23)$$

Mean Square Error (MSE) given by the LMS algorithm is defined as

$$D[n]=Tr[K(n)] \qquad (24)$$

Where$K(N) = E[\epsilon(n)\ \epsilon^*(n)]$
E[.]shows the expectation operator.
For real-time wireless communication, the value of the step-size parameter is taken very small. For slow co-efficient updating with better performanceμ = 0 is used but for less computational time

$\mu = 1$ is used, giving $\widehat{H}_{LMS}[n+1] = \widehat{H}_{LMS}[n]$

THE RESEARCH RESULTS

In this chapter, a MIMO-OFDM system with 2 transmitter antennas and 2 receiver ones is used for the simulation. The assumed system has a QPSK modulation. The total number of subcarriers, N, is 64and L is the tap of channel. For LMS technique, initially the channel can be estimated by LS or LMMSE approach.

The effect of step-size values on MSE for LMS channel estimation is given in Figure 4. For any value of step-size, LMS performs better than LSE. By increasing step-size from 0.1 to 0.5, the performance degrades significantly but further increment of step-size does not have so much impact on performance.

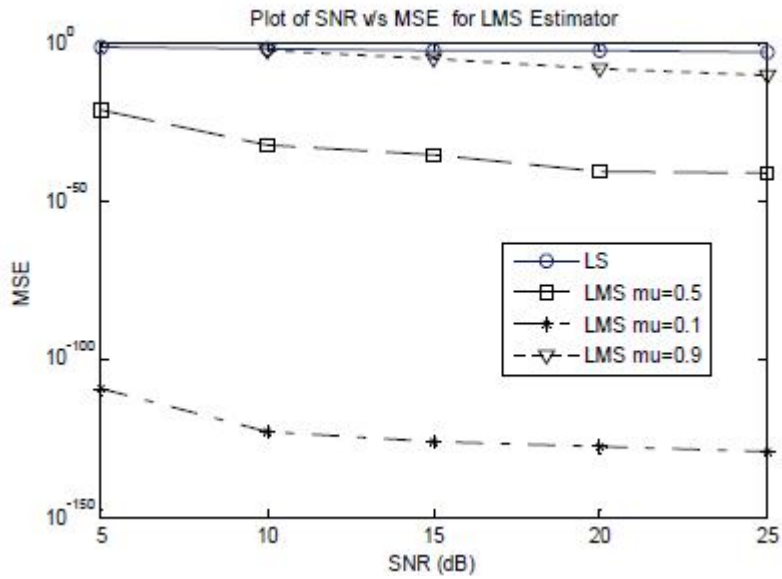

Fig.4: MSE v/s SNR for LMS for different step-size values in SISO-OFDM systems.

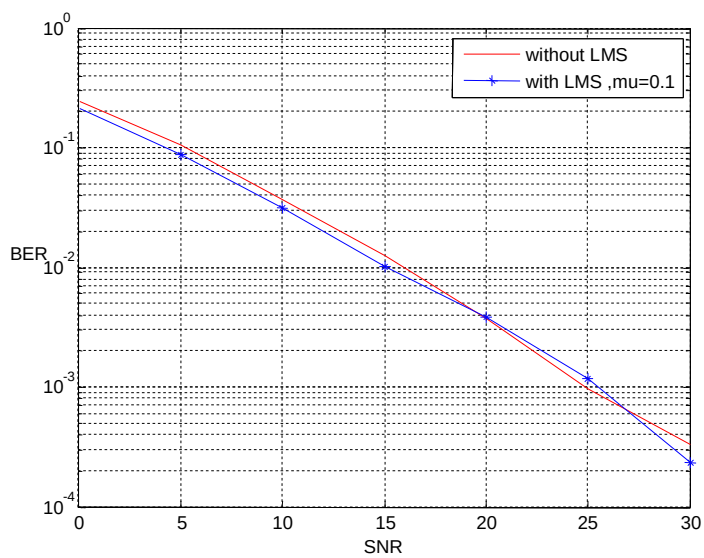

Fig.5: Channel estimation in SISO-OFDM systems L=5 without synchronization and LMS algorithm μ=0. 1.

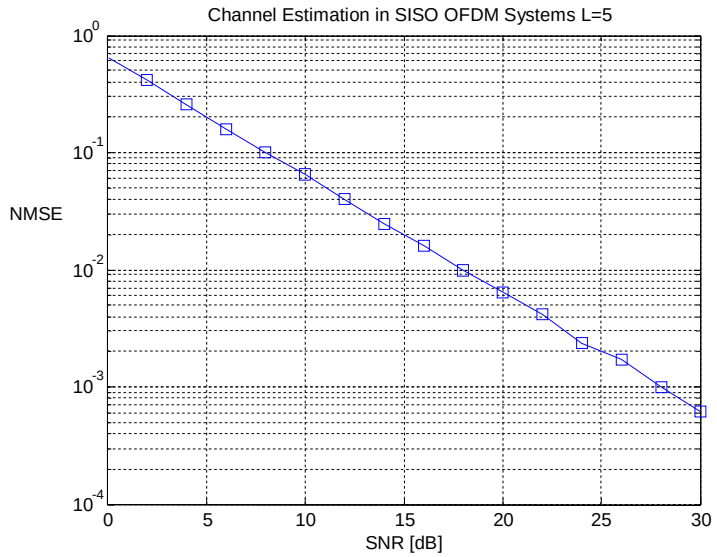

Fig.6: Channel estimation in SISO-OFDM systems L=5 without synchronization with LS estimator.

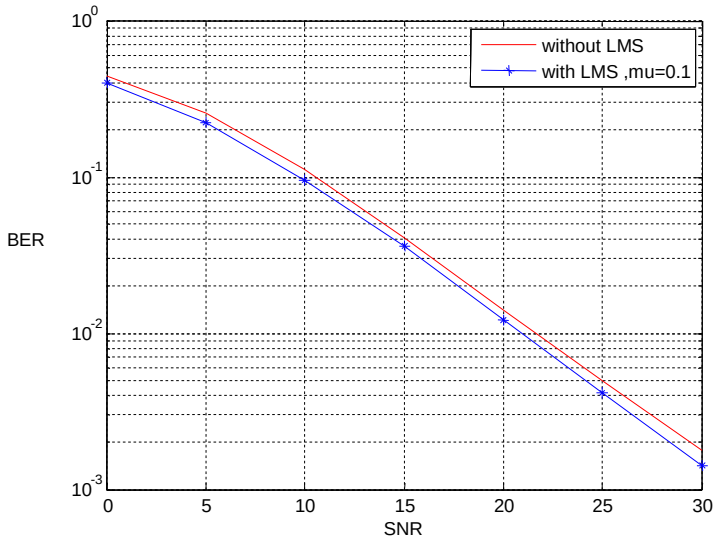

Fig.7: Channel estimation in SISO-OFDM systems L=5 with synchronization and LMS algorithm μ=0. 1.

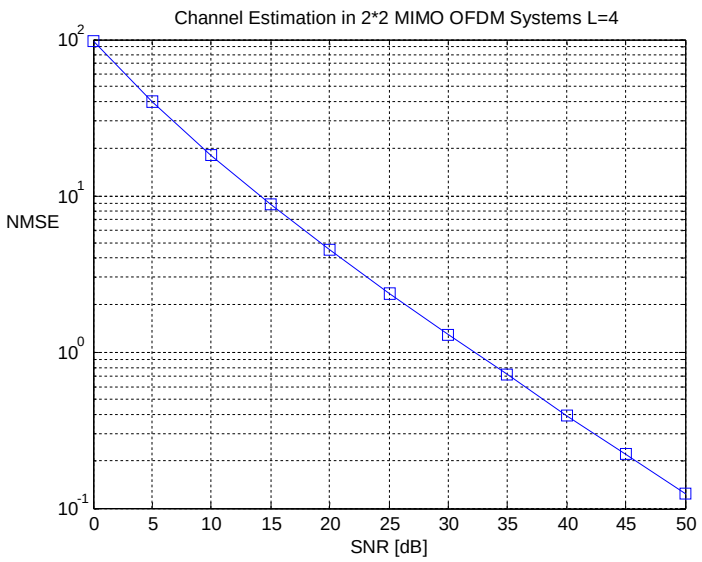

Fig.8: Channel estimation in MIMO-OFDM systems L=4 without synchronization with LS estimator.

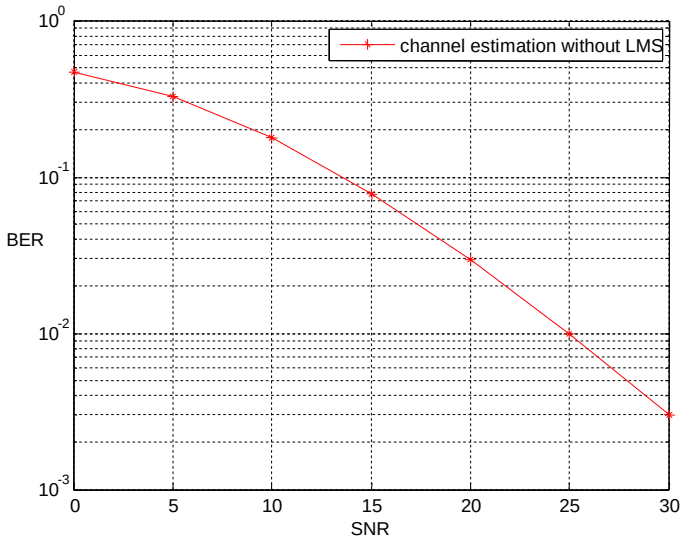

Fig.9: Channel estimation in 2*2 MIMO-OFDM systems L=4 with synchronization.

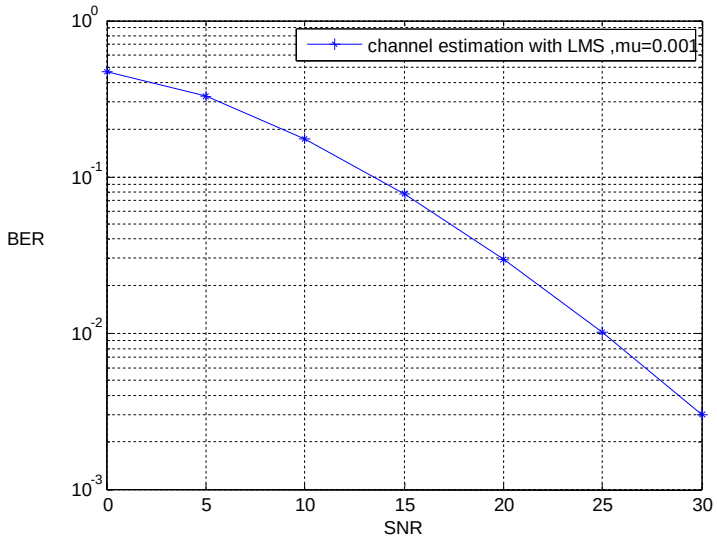

Fig.10: Channel estimation in 2*2 MIMO-OFDM systems L=4 with synchronization and LMS algorithm μ=0.001.

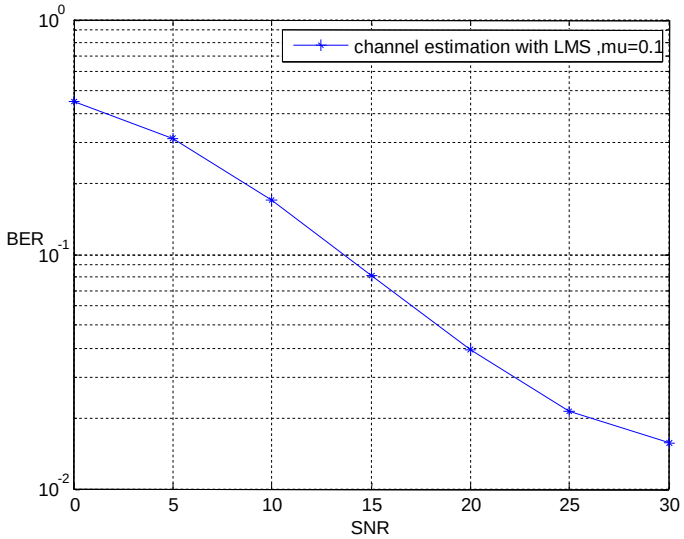

Fig.11: Channel estimation in 2*2 MIMO-OFDM systems L=4 with synchronization and LMS algorithm μ=0. 1.

CONCLUSION

Channel estimation is a crucial and challenging issue in coherent demodulation. Its accuracy has significant impact on the overall performance of the MIMO-OFDM system. The digital source is usually protected by channel coding and interleaved against fading phenomenon, after which the binary signal is modulated and transmitted over multipath fading channel. Additive noise is added and the sum signal is received. Due to the multipath channel there is some inter symbol interference (ISI) in the received signal. Therefore a signal detector needs to know channel impulse response (CIR) characteristics to ensure successful removal of ISI. The channel estimation in MIMO-OFDM systems is more complicated in comparison with SISO systems due to simultaneous transmission of signal from different antennas that cause co-channel interference.

The results show that LMS is an effective algorithm used for the adaptive filter in the inverse system identification to compensate copper transmission. In this paper, channel estimation in OFDM-based systems has been done by using LS estimator. For improving the channel estimation in mentioned systems, LMS estimator is suggested. The LMS algorithm is extremely dependent to parameter, μ. LMS algorithm uses the obtained

coefficients from estimation by means of LS to estimate the channel coefficients and will improve the BER of system.

REFRENCES

[1] G. J. Foschini and M. Gans, “On limits of wireless communications in a fading environment when using multiple antennas,” *Wireless Pers. Commun.*, vol. 6, pp. 311–355, March 1998.

[2] A. Ancora, C. B. Meili, and D. T. Slock, “Down-sampled impulseresponse least-squares channel estimation for LTE OFDMA,” *in Proc.*Int. Con. on Acoustics, Speech, and Signal Processing, pp. III–293–III–296, Apr. 2007.

[3] L. A. M. R. D. Temino, C. N. I Manchon, C. Rom, T. B. Sorensen, and P. Mogensen, ”Iterative channel estimation with robust wiener filteringin LTE downlink,” *in Proc. Int. Con. on VTC*, pp. 1-5, Sept. 2008.

[4] J. J. V. D. Beek, O. E. M. Sandell, S. K. Wilsony, and P. O. Baorjesson, ”On channel estimation in OFDM systems,” *in Proc. Int. Con. on VTC*,vol. 2, pp. 815-819, July 1995.

[5] Yongming Liang, Hanwen Luo, Jianguo Huan,”Adaptive RLS Channel Estimation in MIMO OFDM Systems”, *0 7803-9538, IEEE 2005.*

[6] J. G. Proakis, “Digital Communications”, McGraw-Hill, New York, 1995.

[7] M. Dong, L. Tong and B. M. Sadler, “Optimal pilot placement for channel tracking in OFDM”, pp. 602-606, 2002.

[8] Jin-Goog Kim and Jong-Tae Lim ," MAP-Based Channel Estimation for MIMO–OFDM Over Fast Rayleigh Fading Channels " , 2008 .

[9] Feifei Gao, Yonghong Zeng, Arumugam Nallanathan, Tung-Sang Ng, , " Robust Subspace Blind Channel Estimation for Cyclic Prefixed MIMO OFDM Systems: Algorithm,Identifiability and Performance Analysis " , 2008.

[10] Feng Wan, W.-P. ZhuM. N. S. Swamy, " A Semiblind Channel Estimation Approach for MIMO–OFDM Systems " ,2008.

[11] Gao Fiefie PhD thesis, " Robust Synchronization and Channel estimation for MIMO-OFDM Systems ",2007 .