J. Basic. Appl. Sci. Res., 3(10)76-86, 2013

ISSN 2090-4304
Journal of Basic and Applied Scientific Research
www.textroad.com

A Novel Approach for Reference Current Calculation in Grid Connected Photovoltaic Systems

Hossein Mohseni[1], Masoud Hamedi[2], Vahid Esrafili[3], Mahdi Salimi[*4]

[1]Department of Engineering, Science and Research branch, Islamic Azad University, Ardabil-Iran
[2]Ardabil Province Electricity Distribution Co., Ardabil-Iran
[3]Department of Engineering, Science and Research branch, Islamic Azad University, Ardabil-Iran
[4]Department of Engineering, Ardabil Branch, Islamic Azad University, Ardabil-Iran

Received: June 24 2013
Accepted: July 17 2013

ABSTRACT

In this paper, a novel method for calculation of the reference current in the Shunt Active Power Filters (SAPF) is proposed in the presence of a photovoltaic input power source. In the developed approach, Fourier series expansion is used for the extraction of the reference current. In the designed simplified method, implementation cost of the system can be reduced. Using this method, it is also possible to compensate reactive and harmonic components of the local loads; moreover, it can inject generated active power of the photovoltaic cells into the grid. According to this method, during sunlight the proposed system injects active power to the grid and at the same time compensates the reactive power of the load. When there is no sunlight, the inverter only compensates the reactive power of the load. Considering cost reduction, such capabilities may result in more application of the grid connected photovoltaic systems. Finally, in order to verify the performance of the proposed method, some simulation is done using MATLAB/Simulink.

KEYWORDS: reactive and harmonic compensation, active power filter**,** Fourier series analysis, grid connected photovoltaic, B4 inverter and cost reduction.

1-INTRODUCTION

Power electronics converters are widely used in industrial and commercial applications which suffer from the problem of drawing non-sinusoidal current and reactive power from the source [1]. These power electronics, together with the operation of non-linear applications, inject harmonics to the grid. Presence of harmonics results in increased loss. Different equipment can be used to eliminate harmonics in power networks which may consists active and passive filters, shunt, series and hybrid compensators. SAPF is used more widely considering better performance and its reliability [2]. The operation is based on current harmonic injection required for load at the point of common coupling. The load required current harmonics is supplied from SAPF instead of the grid. Therefore, the current of grid will be purely sinusoidal. The inverter current of the SAPF depends on three important factors: accurate measurement of load current and voltage, calculation of the reference current, and finally appropriate switching strategy [3][4]. Reference current may be calculated in three different domains. First approach is time-domain method. For example in [5], a d-q transformation is proposed in SAPF for reference currents calculations which is based on the in instantaneous reactive power theory. The compensation currents are extracted p-q transformation. Application of these transformation may cause to been complexity in implementation of shunt active power filters. In 1996*Peng* et al [6] have presented a general theory of the instantaneous reactive power in *abc* coordinates. Although this method doesn't require consecutively transformation, but still extra calculations should be done in generation of the instantaneous reactive power vector. In fact, time domain calculations are based on measurement and transformation of the three phase quantities [7]. The second method in reference current calculations is called frequency domain such as: fast Fourier transform [8], discrete Fourier transform [9] and recursive discrete Fourier transform [10].It should be noted that, main advantage of the time-domain methods, compared with the frequency-domain methods is the fast response obtained. On the other side, frequency-domain methods provide accurate individual and multiple load current harmonic detection [11]. The third approach is based on time-frequency domain. Wavelet Transform (WT) is a powerful signal processing tool for computing time-frequency representation of power signals [12].In [13] in order to obtain the reference current for APF based on fundamental positive sequence, discrete wavelet transform is used.

[*]**Corresponding Author:** Mahdi Salimi, Department of Engineering, Ardabil Branch, Islamic Azad University, Ardabil-Iran
Email: m.salimi@iauardabil.ac.ir

Among the different switching methods current approach in grid connected photovoltaic systems is more popular due to: a) since utility is voltage source, it is only enough to control the current flow in order to control power flow between photovoltaic systems and the utility [14]. b) If the voltage control method is used, small phase error in the output voltage of inverter may cause very large power current error [15]. Various current control techniques are proposed for APF: such as the hysteresis current control (HCC) [16], [17], Adaptive-Fuzzy Hysteresis Current Controller [18], the Delta Modulation Control [19], [20] and the Carrier-based PWM control [21], [22]. The performance index for comparison of different methods is %THD of the source currents after compensation.

The requirements for generation of clean energy resulted in application of the renewable energy resources such as wind and solar system. It should be noted that invention of the low- cost thin film panels, may increase application of photovoltaic power plants in the future [23]. There are some advantages that result in motivation toward grid-connected photovoltaic system applications, which are:

1) Reduction in the costs of the PV panels.
2) Operation does not pollute the atmosphere.
3) Inject active power into grid.
4) Reactive and harmonic compensation of the load.

In order to increase performance of the grid connected PV system, it can be designed to provide load compensations [24]. A controller that combines the photovoltaic grid-connected generation and power quality managements is proposed in [25]. Also in [26] an efficient model for power factor correction of the local loads with grid connected photovoltaic systems has been introduced. In [27] a simple control method has been proposed which is capable of local load compensation. A model reference based adaptive controller for SAPF is present in [29] to cancel the harmonic/reactive components in the line current. In [30], a simple method for combination of the SAPF, with photovoltaic system is proposed. In this case, grid connected inverter can inject active power into grid and compensates load. In [14], instead of the traditional three-phase inverters, a novel inverter is used which can reduce total cost of the system.

In this paper, a novel method for calculation of the reference current in grid connected PV system with active power filtering capability is proposed. In the following at the Section 2shunt active power filter explained than at the Section 3 reference current will calculate by Fourier series new structure explained. The section 4 the Control method current hysteresis is checked, finally, in section 4 we'll introduce B4 inverter, Finally, the accuracy of proposed control strategy has been tested with simulation which is based on MATLAB / Simulink.

2–Shunt active filter structure:

The main idea of this paper is calculation of the reference current for harmonic current reduction, reactive power compensation and injection of the active power into grid. A SAPF constructed by a B4 three-phase dc to ac inverter connected to a DC-link capacitor and PV arrays in parallel with the DC-link. According to Fig (1) grid, non-linear load and proposed SAPF are connected in point of common coupling.

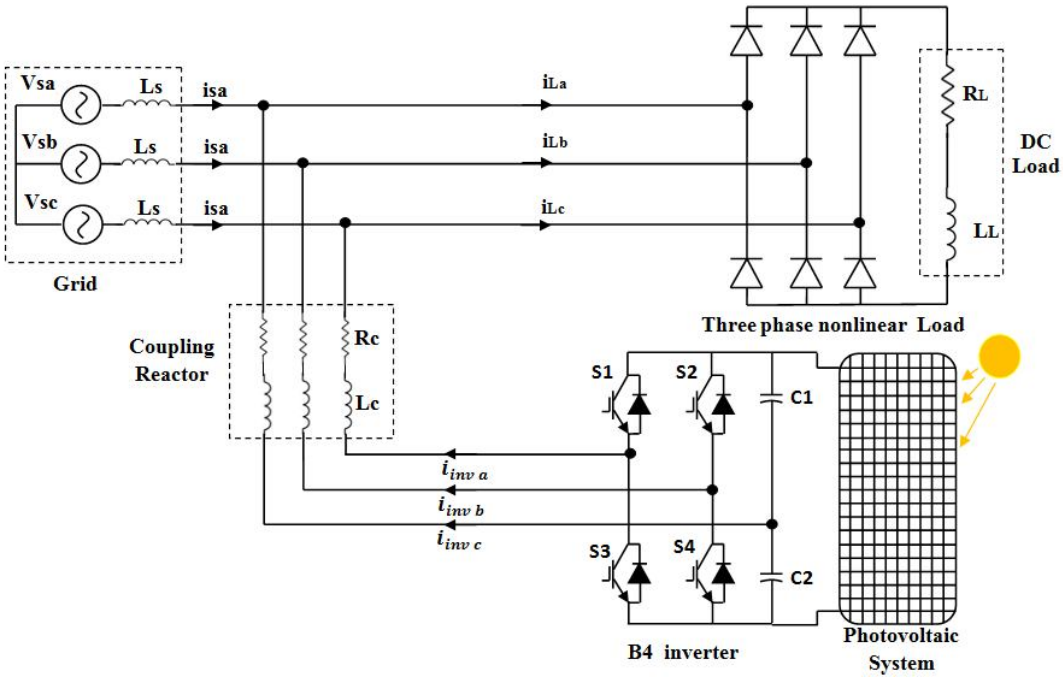

Fig (1): proposed grid connected PV system using B4 inverter

3–Calculation of the reference current:

3-1– Calculated reference current without photovoltaic power generation:(night)

The reference compensation current is determined mainly using the information about both the fundamental and the harmonic contents of the measured load current. This method is based on time domain analysis. In this paper, Fourier series expansion method is used to extract magnitude of the fundamental component of the load current. In this method, on-line samples of the load current and voltage is used in the Fourier series expansion. Load current can be written as follows:

$$i_L(t) = i_{Sinus}(t) + i_h(t) \qquad (1)$$

wherei_{Sinus} , $i_h$are ideal current of the source and harmonic components respectively. Fundamental component magnitude of the load current is:

$$|i_{L1}(t)| = \sqrt{\alpha_1 + b_1} \qquad (2)$$

where:

$$a_1 = \frac{2}{T} + \int_{t-T}^{t} i_L(t)\cos(\omega t)dt \qquad (3)$$

$$b_1 = \frac{2}{T} + \int_{t-T}^{t} i_L(t)\sin(\omega t)\,dt \qquad (4)$$

$$T = \frac{1}{f_1} \qquad (5)$$

In (5), f1 is the fundamental frequency. Calculation process of the reference currentis shown in Fig(2). For calculating of the ideal source current, equation (2) will be multiplied to a unit sinusoidal waveform which is in phase with network voltage. To obtain such a waveform, value of the network instantaneous voltage is divided to its peak voltage:

$$v_{unit}(t) = \frac{v_L(t)}{|v_{L1}(t)|} \qquad (6)$$

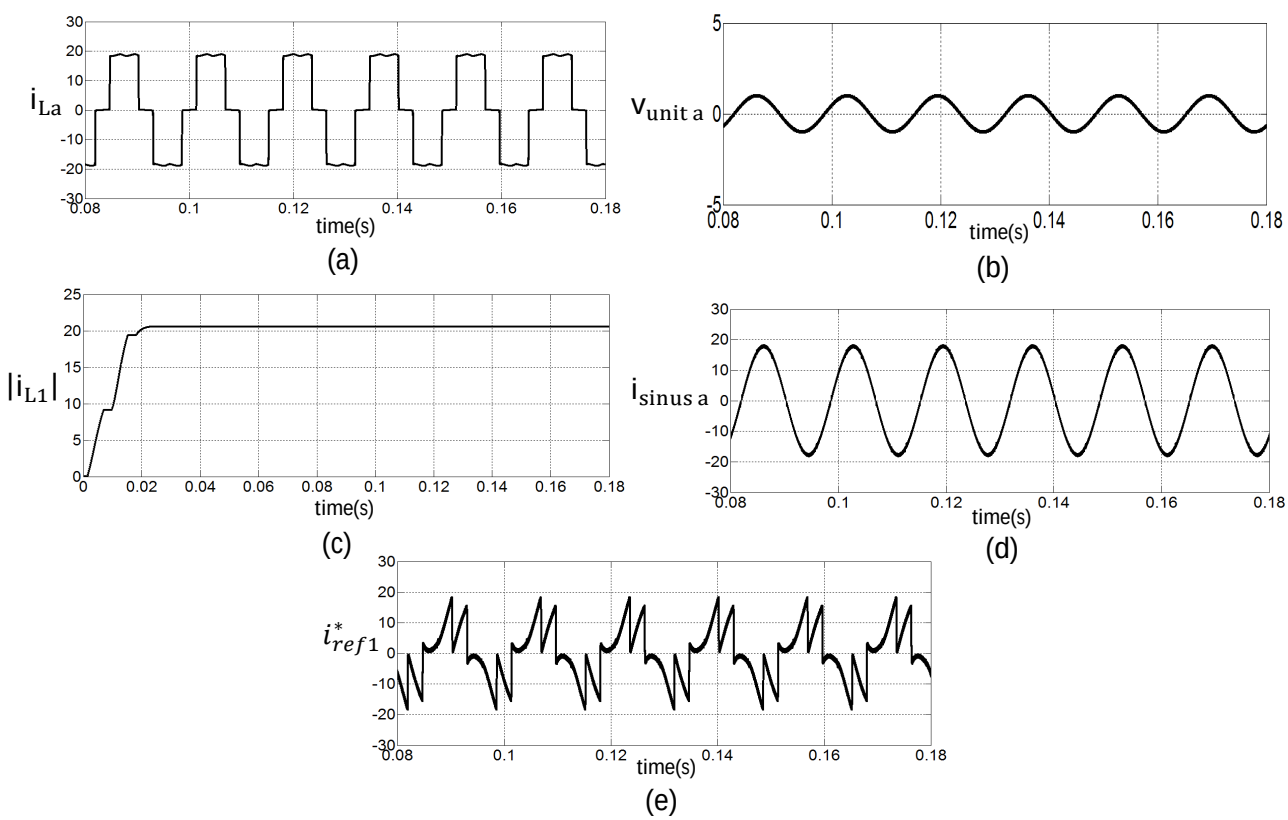

Fig(2):Calculation process of the reference current, (a) Load current (b) Amplitude value of the load current (c) Unit sinusoidal voltage in phase with the grid voltage (d)Desired current of the source(e) reference current (i^*_{ref1})

where$v_L($

$$|v_{L1}(t)| = \sqrt{\alpha_1 + b_1} \quad (7)$$

Considering (2),(6), desired current of the source can be calculated as follows:

$$i_{\text{Sinus}} = |i_{L1}(t)| \times v_{\text{unit}}(t) = |i_{L1}(t)| \times \frac{v_L(t)}{|v_{L1}(t)|} \qquad (8)$$

It is clear that the reference current of the grid connected inverter can be calculated as:

$$i^*_{ref1}(t) = i_h = i_L(t) - \frac{|i_{L1}(t)|}{|v_{L1}(t)|} \times v_L(t) \qquad (9)$$

It is well-known that distance of switching losses in inverter result in reduction of the capacitor voltage. To solve this problem, PI controllers is used for capacitor total voltage regulation and voltage balance between capacitors. Considering voltage error $\tilde{v}_{DC} = v^*_{DC} - v_{DC}$:

$$x_{DC} = k_p \tilde{v}_{DC} + k_I \int \tilde{v}_{DC}\, dt \qquad (10)$$

Wherev^*_{DC}, v_{DC} , k_p ,$k_I$are desired DC-link voltage, total DC-link voltage, proportional and integral PI gains respectively. Transfer function of the PI compensator is:

$$G_v(S) = \frac{x_{DC}}{\tilde{v}_{DC}} = k_p \frac{s + \frac{k_I}{k_P}}{s} \quad (11)$$

Thus, the closed-loop transfer function can be written as follows:

$$\frac{x_{DC}}{v^*_{DC}} = 2\varsigma\omega_n \frac{s + \frac{\omega_n}{2_\varsigma}}{s^2 + 2\varsigma\omega_n + \omega_n^2} \quad (12)$$

In equation (11) and (12):

$$k_p = 2\varsigma\omega_n C_{DC} k_I = \omega_n^2 C_{DC} \qquad (13)$$

The output of the PI controller should i_{ref-a} and i_{ref-b} values aggregated for this purpose are:

$$i^*_{\text{reftotal a}} = i^*_{ref1\,a} + x_{DC}\sin(\omega t) \qquad (14)$$
$$i^*_{\text{reftotal b}} = i^*_{ref1\,b} + x_{DC}\sin(\omega t + 120) \qquad (15)$$

After adjusting total voltage of the capacitor, another PI controller should be used for voltage balancing:

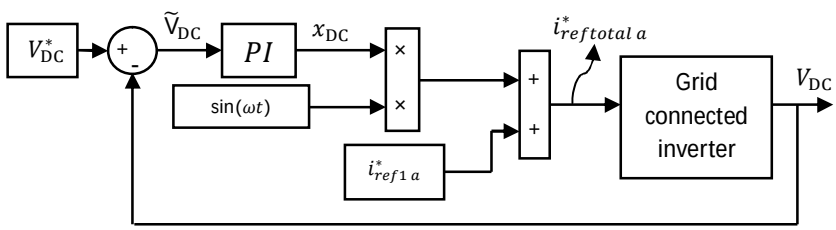

Fig(3):PIcontrol loopfor regulation of thecapacitors voltage (phase

$\tilde{v}_{DC1} = v^*_{DC1} - v_{DC1}$ (16)

$x_{DC1} = k_{p1}\tilde{v}_{DC1} + k_{I1}\int \tilde{v}_{DC1}\ dt$ (17)

$v^*_{DC1} = \frac{v^*_{DC}}{2}$ (18)

Where v_{DC1}, k_{p1} ,k_{I1} are voltage of c_1 , proportional and integral PI gains respectively. Hence final reference current can be written as:

$i^*_{reftotal\ a} = i^*_{ref1\ a} + x_{DC1}\sin(\omega t) + x_{DC1}$ (19)

$i^*_{reftotal\ b} = i^*_{ref1\ b} + x_{DC1}\sin(\omega t + 120) + x_{DC1}$ (20)

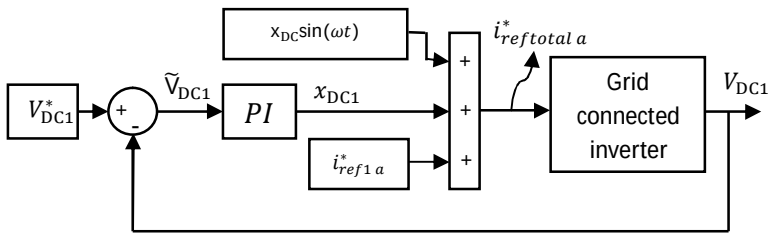

Fig(4): PI control loop for capacitors voltage balancing

3-2–Reference current calculating during day:

Considering environmental conditions maximum generate power by photovoltaic cells, is changed. Also, there is only one point where power generation of PV is maximum. Beside reactive and harmonic compensation, the control strategy of the grid connected photovoltaic systems should inject active power generated by the photovoltaic arrays into the grid. According to the maximum power point of photovoltaic cells, total active power which should be injected into grid could be determined as follows [31]:

$P_m = V_m I_m \quad \rightarrow \quad I_m = \frac{P_m}{V_m}$ (21)

In the above equation V_m and I_m are voltage and current of photovoltaic cell in maximum power point and these both could be measured/calculated easily[31]. In this case, reference current is calculated as follows:

$i^*_{refpv\ a} = i^*_{reftotal\ a} + I_m \sin(\omega t)$ (22)

$i^*_{refpv\ b} = i^*_{reftotal\ b} + I_m \sin(\omega t + 120)$ (23)

where I_m is peak value of the injected active power.

4– Hysteresis current control method:

One of the pulse generating methods for inverter switching is Hysteresis current control .According to the situation of power switches in a single-phase inverter (Fig.3), two different areas can be considered:

A) If we turn S1: on and S3: off, inductive load current (i_{La}) will increase.

B) If we turn S3: on and S1: off, load current will decreases.

It is clear that by applying appropriate switching, we can control the variation of output current and it will always remain inside of specific range. This is done by defining a hysteresis band around the reference current (i_{ref}):

$$\begin{cases} i_{ref(up)} = i_{ref} + \frac{H}{2} \\ i_{ref(Down)} = i_{ref} - \frac{H}{2} \end{cases} \quad (24)$$

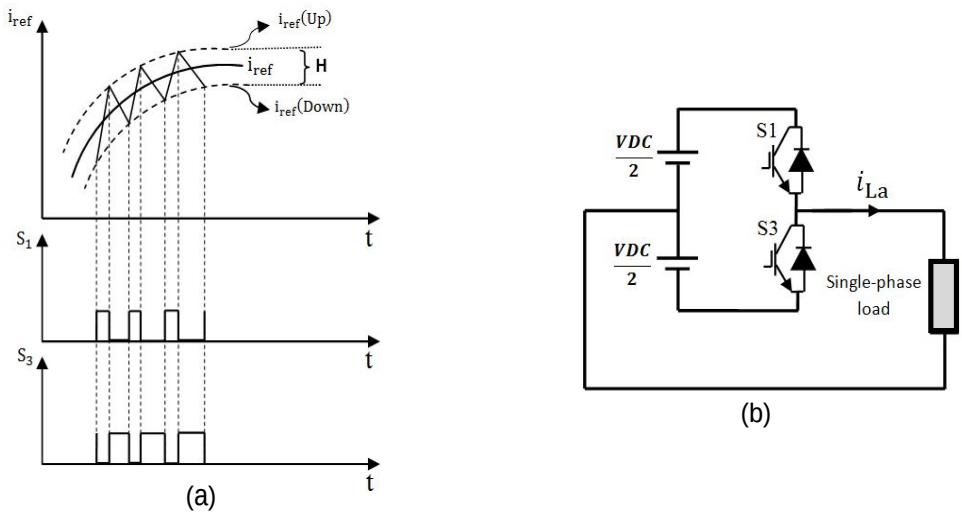

Fig(3): (a) represent Performance principles of the hysteresis current control method which $i_{ref(Up)}$ *and*$i_{ref(Down)}$ *respectively, indicating high and low range of reference current and H is the hysteresis bandwidth. (b) Single phase half bridge inverter*

Where H is called hysteresis band. Obviously reduction of hysteresis band decreases error, but on the other hand, the switching frequency and power losses will increase. During implementation of this method, actual output current of inverter is compared to $i_{ref(Up)}$ and $i_{ref(Down)}$ (Fig.4). For satisfactory operation of the hysteresis current controller, the following conditions should be considered:

$V_{sa} = V_m \sin(\omega t)$ (22)

$\left|\frac{V_{DC}}{2}\right| > |V_m|$ (23)

5–B4 inverter structure:

General operation principles of the B4 inverter is very simple and three-phase inverter could be implemented by connection of two half-bridge single phase inverter. Considering Fig.5 and According to hysteresis current control method and with appropriate switching of S1 and S2, current ia can be shaped easily. For example, suppose that:

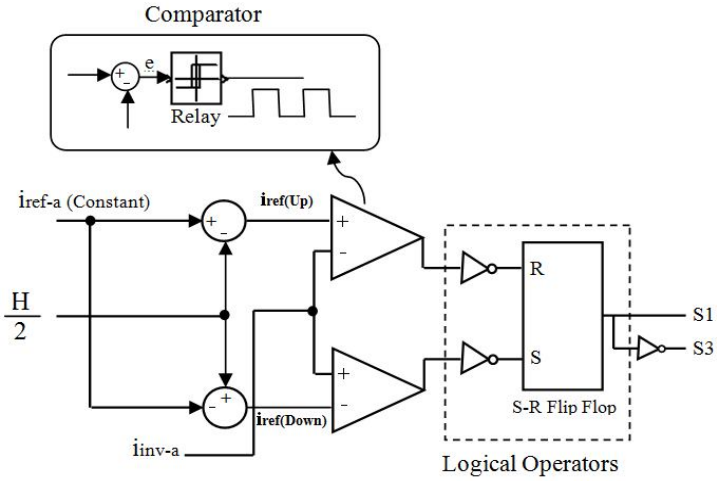

Fig(4): implementation of hysteresis current control circuit(Phase a)

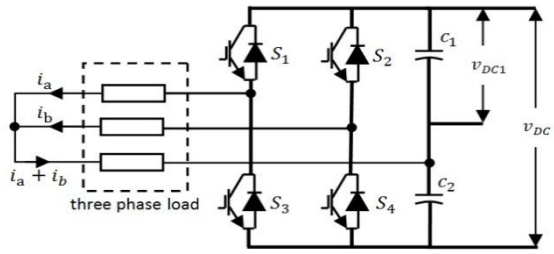

Fig(5): three-phase B4 inverter

$I_a = I_m \sin(\omega t)$ (24)

Also withcontrol of S3 and S4, I_b be formed as follows:

$$I_b = I_m \sin(\omega t - 120) \qquad (25)$$

According to presence of node N in a star connection of load (or null-point of utility) the following relationships can be considered:

$$I_c = -(I_a + I_b) = -(I_a \sin(\omega t) + I_b \sin(\omega t - 120)) = I_c \sin(\omega t + 120) \qquad (26)$$

Which shows that in a balanced three phase systems with star connection, current of phase C is formed without separate hardware and corresponding switches could be removed in order to reduce the final cost [14]. One of the major disadvantages of inverter B4 inability to use when balancing current network load is unbalanced.

6–Simulation results:

In this section, in order to investigate accuracy of the proposed control strategy, grid connected photovoltaic system is simulated according to designed equations with MATLAB / Simulink.

6-1– Night conditions:

During night condition proposed PV system may be used for load compensating purpose. Fig.7 illustrates load voltage and current waveforms. The compensation process is described in Fig.8 for phase a. It is clear that, in spite to non-sinusoidal load current, source current is purely sinusoidal. THD values of the source current before and after compensation are shown in Fig.9. It can be seen that THD is reduced considerably. (from 30.17% to 1.79% after compensating)

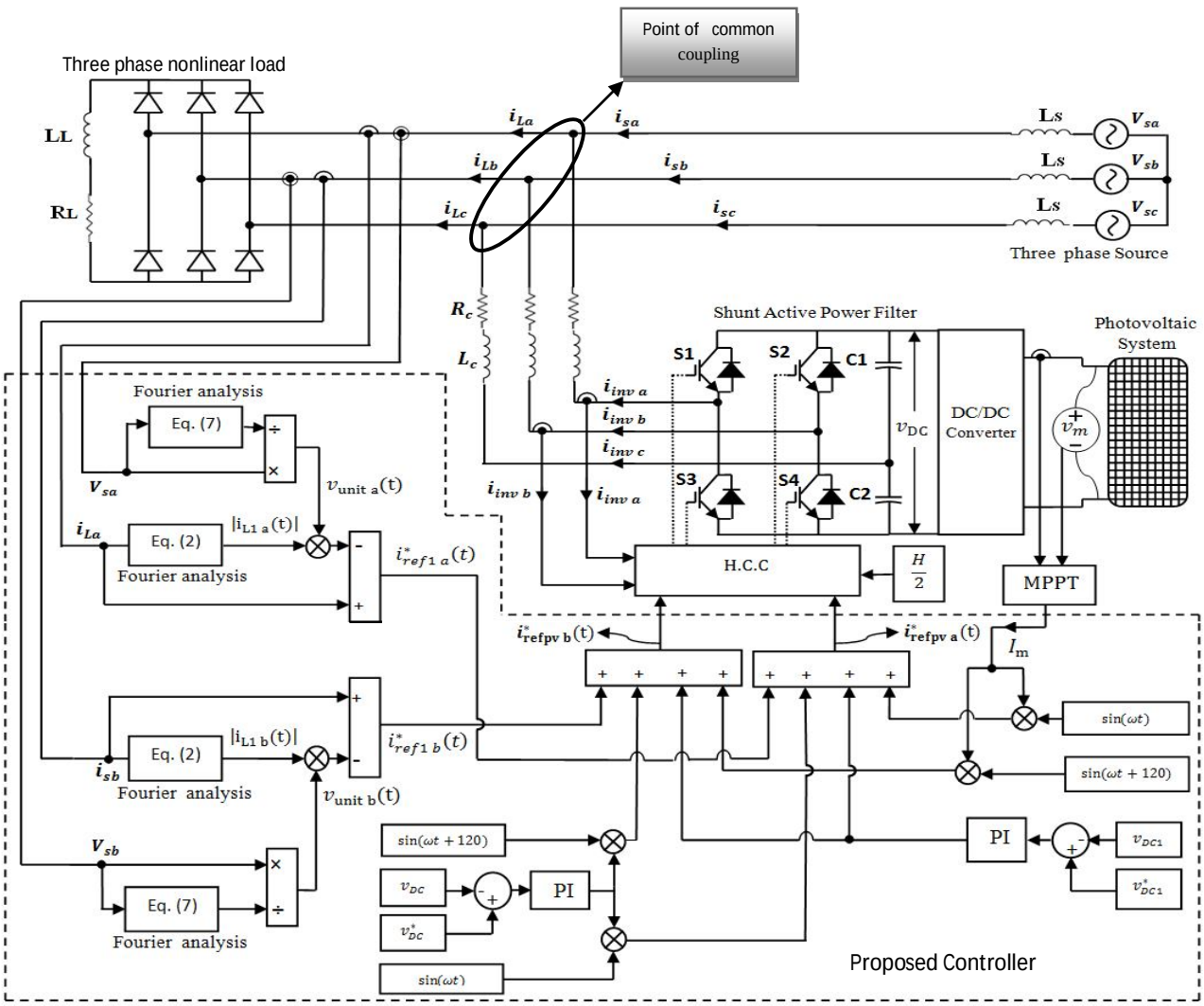

Fig(6): control scheme of the three-phase shunt active power

Table.1: simulation parameters

Components	Part name/ Manufacturer	Rating values
$V_{S(Peak}$	Phase Voltage	**120V**
f	Frequency	**60Hz**
L_S	Line Impedance	**0.006mH**
L_L , R_L	DC-load Parameters	**10mH ,6Ω**
L_C	Coupling Reactor	**1.2mH**
I_m	Maximum power current	**35A**
v_{DC}	Nominal DC link voltage	**800V**
C_1,C_2	DC-link capacitors	**2000µF,2000µF**

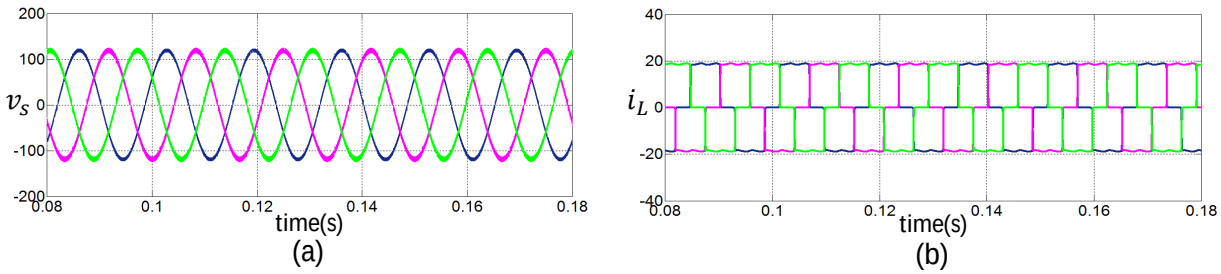

Fig(7): (a) Represents the voltage(phase to phase) three phaseload (b) Represents the Current three phase load

6-2– Response of the proposed system during PV active power generation:

In this condition, grid connected PV system injects active power in to grid and of the same time, load compensation is done. This is shown in more detail for phase a in Fig.10. PV generation is clearly shown in Fig.10. Where the grid voltage and source current phases 180° differ. Operation of the proposed low cost grid connected PV system is illustrated in Fig.11 in more detail. It is clear that, before and after compensation, it is completely sinusoidal. Also it can be seen that during active power injection, source current and voltage phase differ 180º

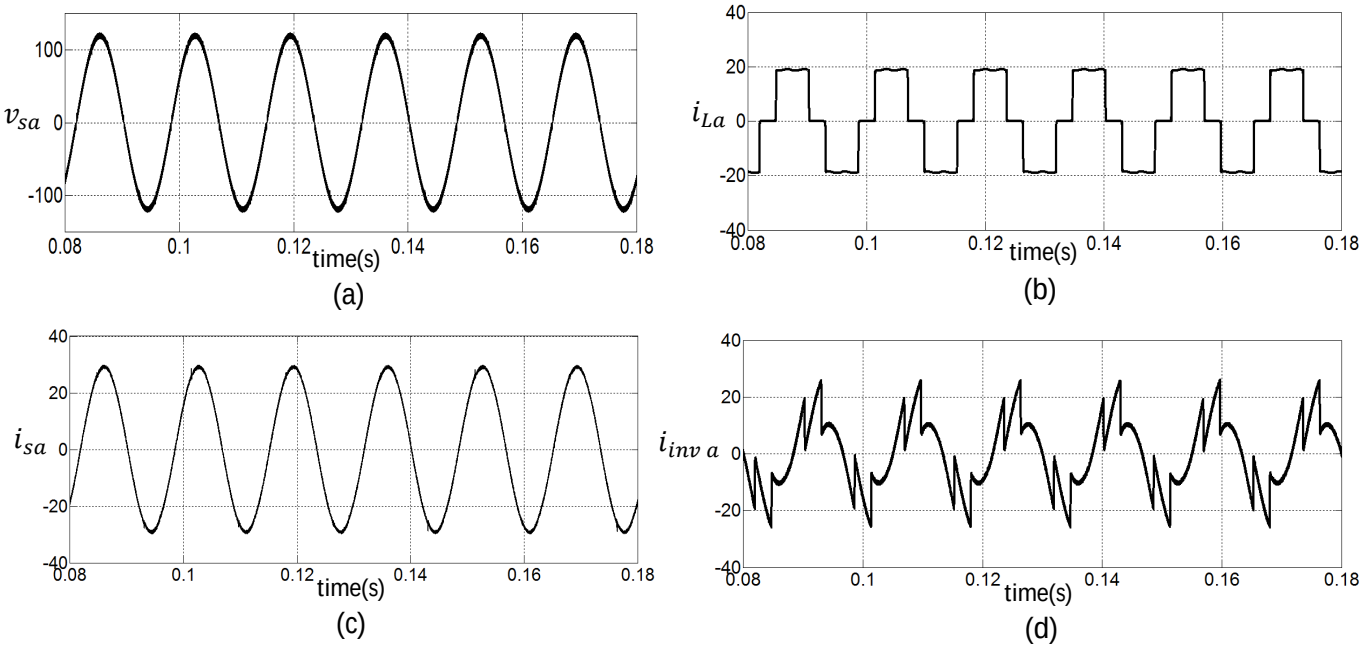

Fi(8): The compensation process is described for phasea

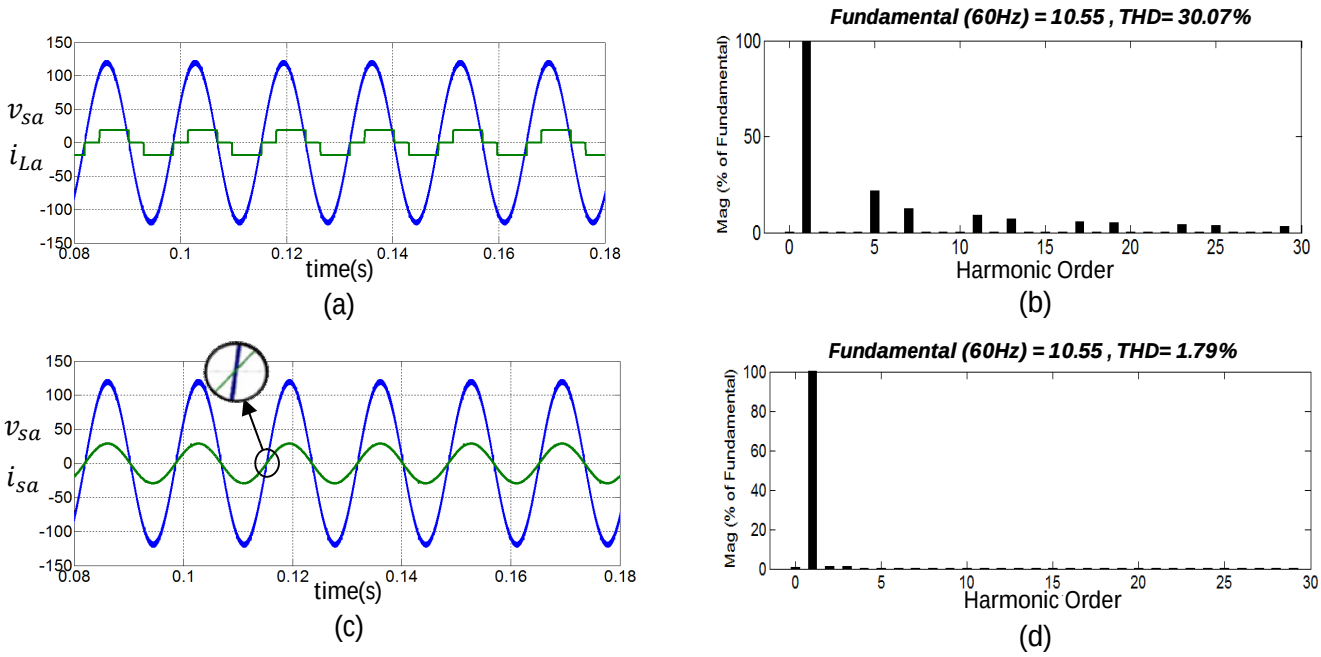

Fig (9): (a) Load voltage and load current(phase a) (b)THD value of the source current before compensation(phase a) (c) source current and load voltage (phase a) (d) THD value of the source current after compensation(phase a).

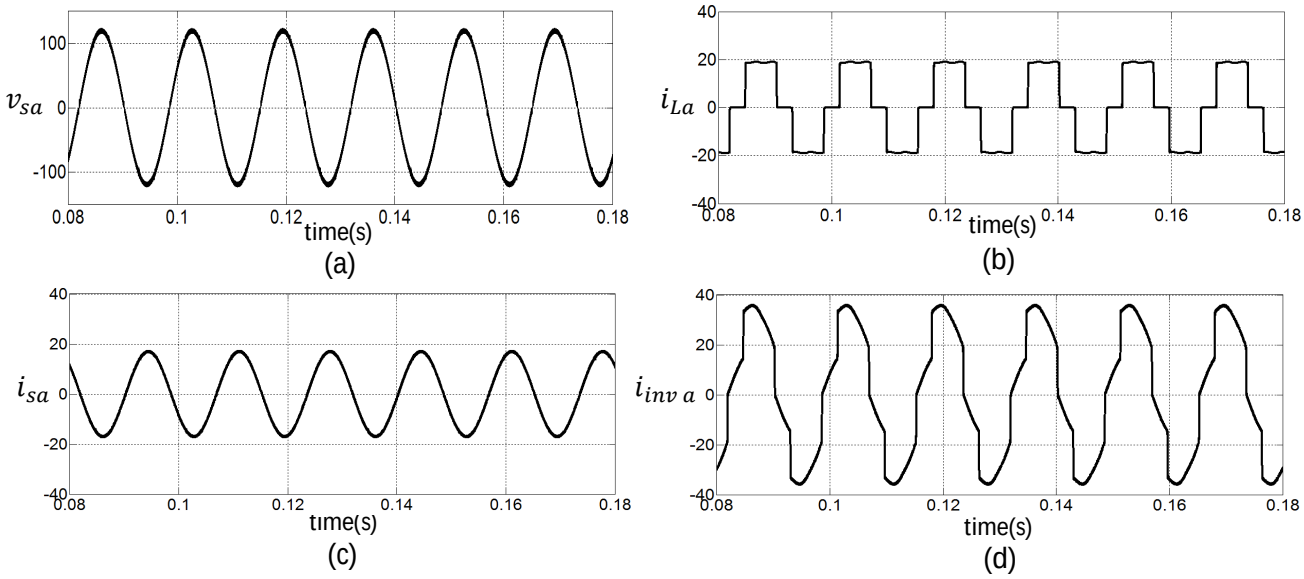

Fig (10): (a) Load voltage and load current(phase a) (b)THD value of the source current before compensation(phase a) (c) source current and load voltage (phase a) (d) THD value of the source current after compensation(phase a).

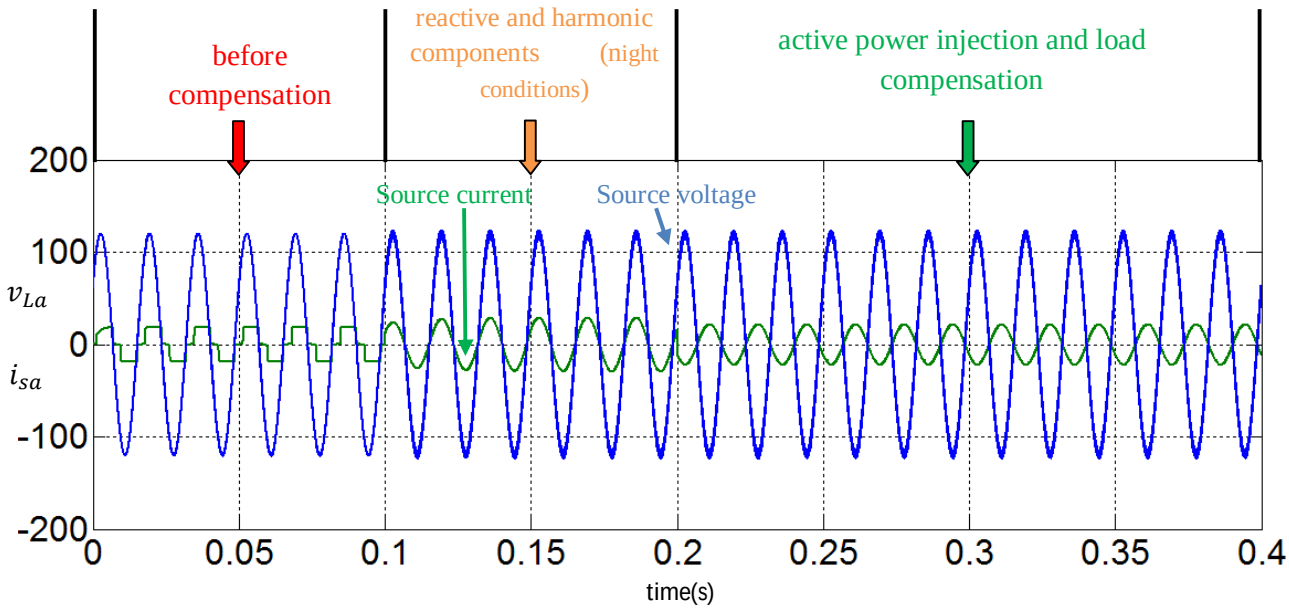

Fig(11) : source voltage and current (phase a)

7- Conclusion

In this paper, a novel method is proposed for grid connection of the PV systems. Designed system can inject generated power of the solar cells in to grid, compensates reactive power of the load and filter load harmonic components all at the same time. B4 invertor is used for implementation of the grid connected system which can increase total cost of the system considerately. Finally accuracy and effectives of the proposed system is verified using MATLAB/Simulink software.

ACKNOWLEDGMENT

The authors declare that they have no conflicts of interest in the research.

REFERENCES

[1] María Isabel Milanés Montero; Enrique Romero Cadaval; Fermín Barrero González; 2007. Comparison of Control Strategies for Shunt Active Power Filters in Three-Phase Four-Wire Systems . IEEE Transactions on Power Electronics, Vol.22, no.1, pp.229-236

[2] Luowei Zhou; Zicheng Li; 2000.A Novel Active Power Filter Based on the Least Compensation Current Control Method. IEEE Transactions on Power Electronics, Vol.15, no.4, pp.655-659

[3] Singh, B. N. B.; Chandra, A.; Rastgoufard, P.; Al-Haddad, K.; 2007. An improved control algorithm for active filters. IEEE Trans. Power Del., vol.22, no.2, pp.1009–1020

[4] George , S.; Agarwal, V.; 2007. A DSP based optimal algorithm for shunt active filter under nonsinusoidal supply and unbalanced load conditions. IEEE Trans. Power Electron., vol.22, no.2, pp.593–601.

[5] Akagi, H.; Kanazawa, Y.; Nabae, A.; 1983.Generalized theory of the instantaneous reactive power in three-phase circuit.Proc.IEFJInt.power Electronics., vol., no., pp.1375-1386.

[6] Peng, F.Z.; Lai, J.S.; 1996.Generalized instantaneous reactive power theory for three-phase power system. IEEE Trans.Instrum. vol.45, no., PP. 239-297

[7] Herrera, R. S.; Salmeron, P.; Kim, H.; 2008. Instantaneous reactive power theory applied to active power filter compensation: Different approaches, assessment, and experimental results. IEEE Trans. Ind. Electron., vol.55, no.1, pp. 184-196

[8] Helal,Ahmed A.; Zakzouk, Nahla E.; Desouky, Yasser G.; 2009.Fuzzy Logic Controlled Shunt Active Power Filter for Three-phase Four-wire Systems withBalanced and Unbalanced Loads.World Academy of Science, Engineering and Technology. vol.34, no., pp. 621-626

[9] KoteswaraRao, I. V.; Sujesh, K. S.; Radha Krishna Reddy, Naresh Kumar, Y.; Kamal, CH.; 2012. A Novel Approach on Harmonic Elimination in Single Phase Systems by Means of a Hybrid Series Active Filter (HSAF). International Journal of Engineering and Advanced Technology, vol.1,no., pp. 57-62

[10] ImaniJajarmi, H.R.; Mohamed, A.; Shareef, H.; R. yaghobi.K; 2012. A Novel Reference Current Generation Method Based on RDFT for Three Phase Shunt Active Power Filter to Improve Power Quality. 4th Iranian Conference on Electrical and Electronics Engineering. vol., no., pp. 636-640
[11] Rahmani, S.; Mendalek, N.; Al-Haddad, K.; 2010.Experimental Design of a Nonlinear Control Technique for Three-Phase Shunt Active Power Filter. IEEE Transactions on Power Electronics, vol.57, no.10, pp. 3364-3375
[12] Asiminoaei, L.; Blaabjerg, F.; Hansen, S.; 2005.Evaluation of harmonic detection methods for active power filter applications. Proceedings of APEC'05, vol.1, no., pp. 635–641.
[13] Yalazan, H.T.; Surgevil, T.; Akpinar, E.; 2007. Wavelet transform application in active power filter used for slip energy recovery drives. Proceedings of the IEEE, vol., no., pp. 398–403.
[14] Salimi**,** M.; 2011.Low-Cost Grid Connected Photovoltaic System. International Conference on Environmental Science and Technology, vol.6, no., pp. v1-141-v1-146.
[15] Masoud, K.; Ledwich, G.; Aspects of Grid Interfacing: Current and Voltage Controllers. Proceeding of AUPEC 99, vol., no., pp.248-263
[16] Kale, M.; Ozdemir, E.; 2003. A Novel Adaptive Hysteresis Band Current Controller for Shunt Active Power Filter , IEEE Conference on Control Applications, vol., no., pp.75 -82
[17] Jun, L.; Dazhi, W.; 2009. Study and Simulation of a Novel Hysteresis Current Control Strategy, IEEE International Conference on Intelligent Computation Technology and Automation, vol.,no., pp. 306-309
[18] Karuppanan.P,; Kamala KantaMahapatra,; 2012. PI and fuzzy logic controllers for shunt active power filter — A report. ISA Transactions, vol.51, no., pp. 163–169
[19] Ziogas , P. D.; 1981. The Delta Modulation Technique in Static PWM Inverter. IEEE Transactions on industry applications, vol.IA-17, no.2, pp. 199-204
[20] Rahman, M. A.; Quaicoe, J. E.; Choudhury, M. A.; 1987. Performance Analysis of Delta Modulated PWM Inverter. Transactions on power electronics, vol.PE-2, no.3, pp. 227-233
[21] Kim, J-H; Sul, S-K.; 2004. A Carrier -Based PWM Method for Three-Phase Four-leg Voltage source converter. IEEE Transaction on Power Electronics, vol.19, no.1, pp. 66-75
[22] Maswood, A. I.; Al-Ammar, E.; 2010. Analysis of a PWM Voltage Source Inverter with PI Controller under Non-ideal conditions, IEEE Conference, vol., no., pp.193-198
[23] Kazunori Shimazaki,; Yuki Kobayashi,; Masato Takahashi,; Mitsuru Imaizumi,; Tatsuya Takamoto,; Takehiko Ito,; Yukishige Nozaki.; 2009. Development Statusof Ultra-Lightweight Solar Panel Using Space Solar Sheet. IEEE, vol., no.,
[24] Cavalcanti, M. C.; Azevedo, G. M. S.; Amaral, B. A. K.; etc,; 2005. Efficiency Evaluation in Grid Connected Photovoltaic Energy Conversion Systems.Proceedings of the2005 IEEE Power Electronics Specialists Conference. vol., no., pp. 269-275
[25] Xiaogao Chen, Qing Fu, Shijie Yu, and Longhua Zhou, 2008. Unified Control of Photovoltaic Grid-Connection and Power Quality Managements. Proc. 2008 Power Electronics and Intelligent Transportation System Conf, vol., no., pp. 360-365.
[26] Barbosa, P.G.; Rolim, L.G.B.; Watanabe E.H.; Hanitsch, R.; 1998. Control Strategy for Grid-connected DC-AC Converters with Load Power Factor Correction. IEEE, vol., no.,
[27] Bae, H. S.; Park , J. H.; Cho, B. H.; Yu, G. J.; 2005. New Control Strategy for 2-stage Utility-Connected Photovoltaic Power Conditioning System with a low cost digital processor. IEEE, vol., no.,
[28] Kuo-Kai Shyu,; Ming-Ji Yang,; Yen-Mo Chen,; 2008. Model Reference Adaptive Control Design for a Shunt Active-Power-Filter System. IEEE Transaction on Industrial Electronics, vol.55, no.1, pp. 97-106
[29] Leonard G. Leslie, Jr,; 2003. Design and Analysis of a Grid Connected Photovoltaic Generation system with Active Filtering Function. Master of Science in Electrical Engineering Blacksburg, Virginia March 14
[30] Wenjin Dai,;Baofu Wang,; Hua Yang,; 2009. A Hysteretic Current Controller for Active Power Filter with Constant Frequency. IEEE Int. Conf. on Computational Intelligence for Measurement Systems and Applications, CIMSA, vol., no., pp.86-90
[31] TrishanEsram; Patrick L. Chapman; 2007.Comparison of Photovoltaic Array Maximum Power Point Tracking Techniques. IEEETRANSACTIONS,