J. Basic. Appl. Sci. Res., 1(12)3496-3503, 2011
© 2011, TextRoad Publication

ISSN 2090-4304
Journal of Basic and Applied Scientific Research
www.textroad.com

Differential Evolution Algorithm in order to Design PID Controller for Output Power Control of Micro-Turbine

Noradin Ghadimi, Rasoul Ghadimi

Department of Electrical Engineering, Ardabil Branch, Islamic Azad University, Ardabil, Iran

ABSTRACT

This paper is aimed to introduce the new controller in order to control of output power of one of the most important types of distributed generation namely micro-turbine, during system load variations. Micro-turbine output power should be control against the load variations in island mode condition and a controller should be designed for this purpose. Here, the PID Controller is used which its coefficients are optimized based on Differential evolution algorithm. In order to use this algorithm, at first, problem is written as an optimization problem which includes the objective function and constraints, and then to achieve the most desirable controller, Differential evolution (DE) method is applied to solve the problem. Simulation results are done for various loads in time domain, and the results show the efficiency of the proposed controller. Simulations show improved accuracy of the proposed controller performance to achieve this goal.

KEY WORDS: Micro-Turbine, Differential Evolution, Distributed Generation, Controller Design, Optimization.

1. INTRODUCTION

Concern about the limitation of fossil fuels and rising precaution of environmental protection cause the installation of DGs increase annually [1]. The fundamental plants for the penetration of DG technologies are the high efficiency of the energy conversion process and the limited emission of pollutants as compared to conventional power plants. Also, they provide a number of important local benefits. The integration of the increasing portion of DG within the existing infrastructure requires a full understanding of its impact on the distribution feeders and its interaction with the loads. Such studies require accurate modeling of Distributed Generation (DG) sources including distribution system. Distributed generation using micro-turbine is a typical and practical solution because of its environment-friendliness and high energy efficiency [2].

Until now, only few works were undertaken on the modeling, simulation and control of micro turbines. There is also a lack of adequate information on their performances. A dynamic model for combustion gas turbine has been discussed in [3]- [6].

In [1], in order to feed to vector controlled induction motor drive and other static loads, micro turbine based Distributed generation system is implemented. The Micro turbine provides input mechanical energy for the generator system. Aspects of dynamic modeling and simulation of fuel cell and micro-turbine units as a part of a multi-machine electrical network investigated in [7].

Lecture [8] demonstrated the development of a micro turbine model and its operation with a permanent magnet synchronous generator. A non-linear model of the micro-turbine is considered and implemented in NETOMAC software [9].

In [10], proposed an active filter for MT. Adaptive control of fuel cell and MT is well described in [11]. Authors demonstrated the development of a MT model from the dynamics of each part which is suitable for studying various operational aspects of the same [12].

In this paper a simple PID Controller for micro-turbine power control has been used except that the controller design has not been achieved through trial and error. But the problem has been proposed as an optimization problem and then solved by using Differential evolution. About the advantages of the proposed control, we can point followings: 1- controllers are simple 2- being robustness against load changes 3- fast transient response 4- zero steady error.

In next section, the test system used to verify the effectiveness of the proposed technique describe in next section. Section 3 represents the DE algorithm in order to solve the optimization problem. Section 4

***Corresponding Author**: Noradin Ghadimi, Department of Electrical Engineering, Ardabil Branch, Islamic Azad University, Ardabil, Iran. Office: +989147028949 Email: noradin.ghadimi@yahoo.com

explores the effectiveness of the proposed technique applied on simulation test system, Section 5 concludes the paper. The simulation test systems were simulated in MATLAB software.

2. System Description

Originally, there are two kinds of small gas turbines, high speed single shaft turbines and split shaft turbines. In the single shaft turbines, the alternator generates a very high frequency three phase signal ranging from 1500 to 4000 Hz. The high frequency voltage is first rectified and then inverted to a normal 50 or 60 Hz voltage. In the split shaft design, a conventional induction or synchronous machine is mounted on the power turbine via gearbox and the power inverters are not required [13].

The study system in this paper that the proposed algorithm applied to this system is shown in figure 1. This system contain PID controller, split shaft gas turbine and synchronous generator. The simplified single shaft gas turbine including all its control systems is shown in Fig. 2. All of parameters in this figure are given in table 1.

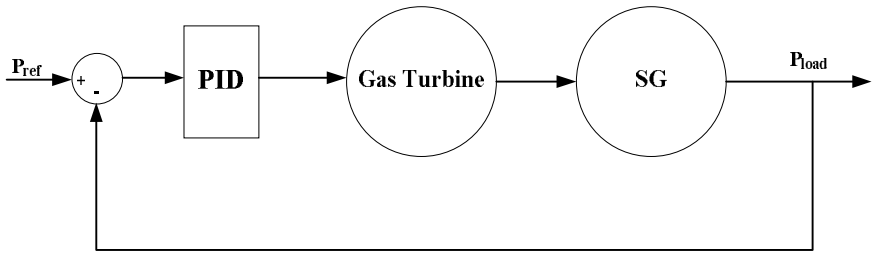

Figure 1: Study system contain of gas turbine and synchronous generator

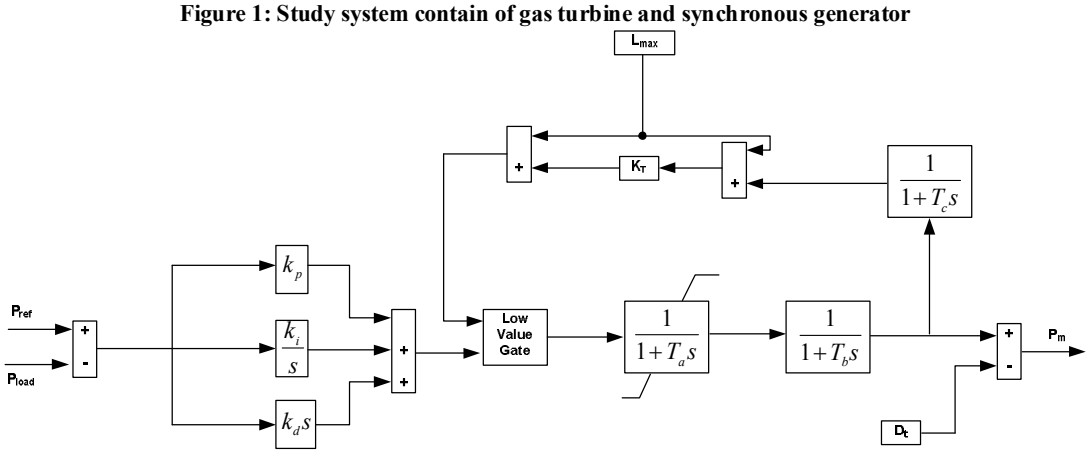

Figure 2: single shaft gas turbine including all its control systems

Figure 3 shows the synchronous generator, Transformer and local load. A step-up transformer is located between synchronous generator and local load in order to change the voltage level. V_{ref} and P_m are the input of Synchronous generator that V_{ref} is set to 1 p.u and Pm provides bye gas turbine. All parameters of synchronous generator, transformer and local load present in table 2.

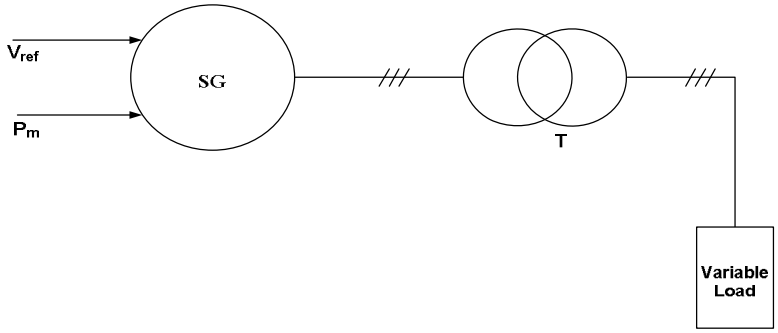

Figure 3: synchronous generator, Transformer and local load

Table 1: Parameters of shaft gas turbine

Parameters	Value
Rated power	100 KW
Real power reference	1.0
Damping of turbine, Dt	0.03
Fuel system lag time constant , Ta	10.0 s
Fuel system lag time constant , Tb	0.1 s
Load limit time constant, Tc	3.0 s
Load limit, Lmax	1.2
Maximum value position, Vmax	1.2
Minimum value position, Vmin	-0.1
Temperature control loop gain, KT	1.0

Table 2: synchronous generator and load Parameters

Parameter	Value
Rated power	100 KW
Rated voltage	440 V
Frequency	60 Hz
Number of poles	2
Damping factor, KD	0.06 p.u.
Inertia constant	0.822 s
Internal resistance, R	0.04 p.u.
Internal reactance, X	0.3 p.u.
3-ph source base voltage	11 KV
Dist. trans. nominal power	150 KVA
Frequency	60 Hz
Dist. trans. primary voltage	11 KV
Dist. Trans. secondary voltage	440 V

3. Controller Design

3.1 *DE algorithm*

At first Storn and Price proposed Differential Evolutionary that is one of the most illustrious new generation evolutionary algorithms to exhibit consistent and reliable performance in nonlinear optimization applications, including problems in various fields such as control, parameter identification, optimization, economic dispatch of electric power systems, inverse method and others [14-17].

According to Price [18], the main advantages of a DE include, Fast and simple for application and modification, Effective global optimization capability, Parallel processing nature, Operating on floating point format with high precision, Efficient algorithm without sorting or matrix multiplication, Self-referential mutation operation, Effective on integer, discrete, and mixed parameter optimization, Ability to handle non-differentiable, noisy, and/or time-dependent objective functions, Operates on flat surfaces, Ability to provide multiple solutions in a single run and effective in nonlinear constraint optimization problems with penalty functions

DE algorithm acts as following [19]:

Step 1: Determination of parameters setting: At the first, should be determine the key parameters that control DE such as population size, constrains, mutation factor, stopping criterion and etc.

Step 2: Initialization individually of the initial population

At t = 0, the population should be initialize individually with random values generated in the n-dimensional problem space.
Step 3: Evaluation of individuals
Evaluate the fitness value of each individual.
Step 4: Mutation operation
Mutate individuals according to the following equation:

$$z_i(t+1) = x_{i_1}(t) + f_m \left[x_{i_2}(t) - x_{i_3}(t) \right] \quad (1)$$

where, i = 1, 2,. . . ,N is the individual's index of population; $x_i(t) = [x_{i1}(t), x_{i2}(t),..., x_{in}(t)]^T$ stands for the position of the i-th individual of population of real-valued n-dimensional vectors; $z_i(t) = [z_{i1}(t), z_{i2}(t),..., z_{in}(t)]^T$ stands for the position of the i-th individual of a mutant vector; fm > 0 is a real parameter, called mutation factor. The mutation operation randomly select the target vector $x_{i_1}(t)$, with $i \neq i_3$. Then, two individuals $x_{i_2}(t)$ and $x_{i_3}(t)$ are randomly selected with $i_1 \neq i_2 \neq i_3 \neq i$, and the difference vector $x_{i_2}(t) - x_{i_3}(t)$ is calculated.
Step 5: Crossover operation
After mutation operation, crossover is applied in the population. For each mutant vector, $z_i(t + 1)$, an index $rnbr(i) \in \{1,2,..n\}$ is randomly chosen using a uniform distribution, and a trial vector,
$u_i(t+1) = [u_{i1}(t+1), u_{i2}(t+1),..., u_{in}(t+1)]^T$, is generated with

$$u_{ij}(t+1) = \begin{cases} z_{ij}(t+1) & \text{if } randb\ (j) \le CR \text{ or } j = rnbr\ (i) \\ x_{ij}(t) & \text{otherwise} \end{cases} \quad (2)$$

where j = 1, 2,. . ., n is a parameter index; $x_{ij}(t)$ stands for the i-th individual of j-th real-valued vector; $z_{ij}(t)$ stands for the i-th individual of j-th real-valued vector of a mutant vector; $u_{ij}(t)$ stands for the i-th individual of j-th real-valued vector after crossover operation; *randb(j)* is the j-th evaluation of a uniform random number generation in the range [0, 1]; CR is a crossover rate in the range [0, 1].
Step 6: Selection operation
To decide whether or not the vector $u_i(t + 1)$ should be a member of the population comprising the next generation, it is compared to the corresponding vector $x_i(t)$. Thus, if F denotes the objective function under minimization, then

$$x_i(t+1) = \begin{cases} u_i(t+1), & \text{if } F(u_i(t+1)) > F(x_i(t)) \\ x_i(t), & \text{otherwise} \end{cases} \quad (3)$$

Step 7: Verification of the stopping criterion
Update the generation number using t = t + 1. Proceed to Step 3 until a stopping criterion is met, usually a maximum number of iterations (generations), t_{max}.

3.2 *Using DE to adjust controller parameters*

With so much development in controlling systems and making applicable of these controllers, in power system, simple controllers are still considered desirable controllers [12]. In most cases in the power systems, compensators are PID controllers. And these controllers can be implemented easily in analog and digital systems. In this paper, PID controller is used to control voltage of load voltage of micro-turbine in island condition. The overall controller schematic is shown in figure (4).

Controller general form is expressed in equation (4). The controller parameters must be optimized include: k_p, k_i, k_d. It is clear that the transient mode of the system in the load variations depends on the controller coefficients. Controller design methods are not viable to be implemented because this system is an absolute nonlinear system. So these methods would have not efficient performance in the system.

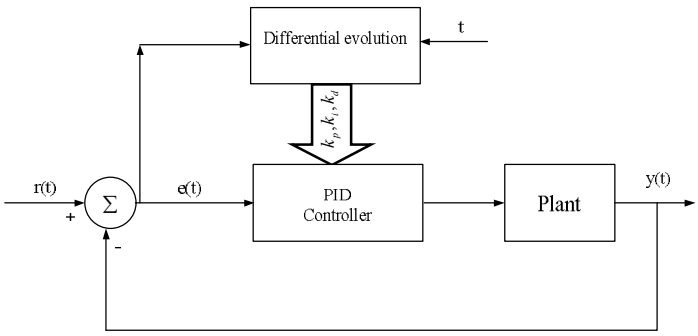

Figure (4): scheme of design proposed controller

$$G_c(s) = k_p + \frac{k_i}{s} + k_d s \qquad (4)$$

In order to design controller using Differential evolution for the micro-turbine from the load power curve, we consider the worst condition for load design controllers for these conditions. Figure (5) displays the worst condition for load power in the system.

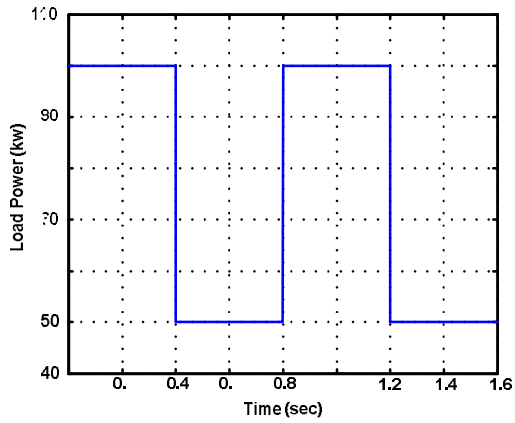

Figure (4): worst condition for load power

Now, problem should be written as an optimization problem and then be solved. Selecting objective function is the most important part of this optimization problem. Because, choosing different objective functions may completely change the particles variation state. In optimization problem here, we use error signal.

$$J = \int_0^{t=tsim} \left| P_{ref} - P_{load} \right| dt \qquad (5)$$

Where, *tsim* is the simulation time in which objective function is calculated. We are reminded that whatever the objective function is a small amount in this case the answer will be more optimized. Each optimizing problem is optimized under a number of constraints. At this problem constraints should be expressed as.

Minimize J Subject to

$$\begin{aligned} k_p^{\min} &< k_p < k_p^{\max} \\ k_i^{\min} &< k_i < k_i^{\max} \\ k_d^{\min} &< k_d < k_d^{\max} \end{aligned} \qquad (6)$$

Where, k_p, k_i are in the interval [0.01 300] and k_d in the interval [0.001, 10].

In this problem, the number of particles, dimension of the particles, and the number of repetitions are selected 28, 3 and 65, respectively. After optimization, results are determined as below:

$$k_p = 150.1842\ k_i = 177.3406, k_d = 0.0055 \tag{7}$$

4 SIMULATION RESULTS

To show good performance of the proposed algorithm, we consider variable load in order to supply by micro-turbine in island mode. Desired load power is shown in Figure (6). As can be seen, desired load is changing between the range of 0.15 to 0.9 per unit which change within 14 seconds, and the numbers of its changes are considered more to show the performance of the proposed controller.

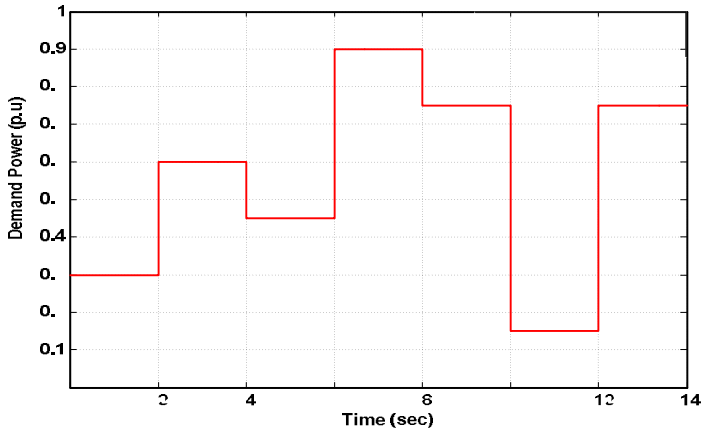

Figure (6): Power demand for micro-turbine in island mode

Simulation output results obtained from the proposed algorithm which is expressed in equation (7) are shown in figure (7), (8) and (9). Figure (7) depicted the output power of micro-turbine that provides the demand loads in island mode and reference power. From this figure, it can be seen that by changing load power; supplied power change quickly to keep stable the output frequency of the micro-turbine under the desired voltage and this show good performance of the proposed controller albeit simplicity. In figure (8) instantaneous of output current of load for phase (a) is shown, according to the figure it is obvious that controller response is appropriate and it could control the output current of mention system properly. In figure (9), the load voltage is plotted which the high efficiency of the proposed algorithm shown clearly.

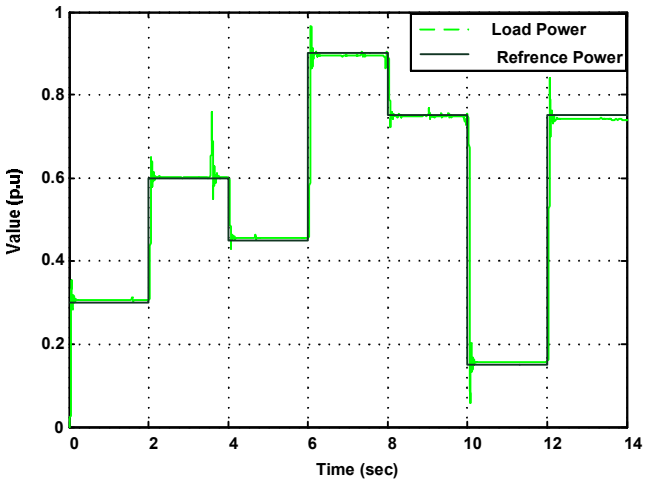

Figure (7): reference and output power related to the proposed controller

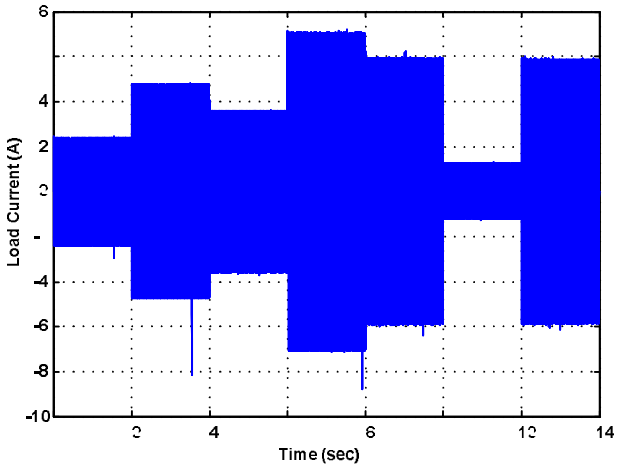

Figure (8): Load instantaneous current related to the proposed controller

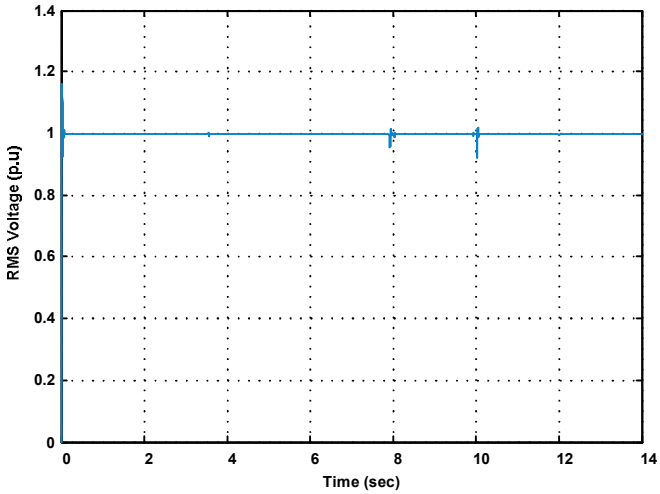

Figure (9): micro-turbine output voltage related to the proposed controller

5 Conclusion

In this paper, a new controller based on Differential evolution and PID controller to control the micro-turbine output power in island mode was proposed. This controller is chosen because of its simplicity and because the implementation of this controller is simple and it could obviate the problem of the previous controller and its efficiency is higher than previous controllers. DE algorithm was utilized to design the PID controller to have the most optimized state. In solving this problem, at first problem was written in the form of the optimization problem which its objective function was defined and written in time domain and then the problem has been solved using DE. And the most optimal mode for gain coefficient of controller were determined using the algorithm.

REFERENCES

[1] Teja Tikkisetty, Balaj Gutta , Modeling and simulation of Micro turbine based DG system feeding Vector Controlled Induction Motor (VCIM) drive and other static loads , (IJAEST) International Journal of Advanced Engineering Sciences and Technologies, Vol No. 9, Issue No. 2, 289 – 293

[2] V.V. Thong, J. Driesen, and R. Belmans, "Transmission system operation concerns with high penetration level of distributed generation", in Proc. of Inter. Universities Power Engineering Conference, Brighton, 2007, pp.867 – 871

[3] W. I. Rowen, "Simplified Mathematical Representations of Heavy Duty Gas Turbines," *Journal of Engineering for Power, Trans. ASME,* vol. 105, no. 4, pp. 865-869, Oct, 1983.

[4] L.N. Hannet and Afzal Khan, Combustion Turbine Dynamic Model Validation from Tests, *IEEE Trans. on Power Systems,* vol.8, no.1, pp. 152-158, Feb.1993.

[5] Working Group on Prime Mover and Energy Supply Models for System Dynamic Performance Studies, "Dynamic Models for Combined Cycle Plants In Power System Studies," *IEEE Trans. Power System*, vol. 9, no. 3, pp. 1698-1708, Aug.1994.

[6] L.N. Hannett, G. Jee, and B. Fardanesh, "A Governor/Turbine Model for a Twin-Shaft Combustion Turbine," *IEEE Trans. on Power System*, vol. 10, no. 1, pp. 133-140, Feb. 1995.

[7] Ahmed M. Azmy, and István Erlich, Dynamic Simulation of Fuel Cells and Microturbines Integrated with a Multi-Machine Network, IEEE Bologna Power Tech Conference, June 23th-26th, Bologna, Italy,pp

[8] S.R. Guda, C. Wang, and M.H. Nehrir, "A simulink-based microturbine model for distributed generation studies," IEEE, Proc. Power Symposium, pp. 269-274, Oct 2005.

[9] H. Nikkhajoei and M.R. Iravani, "Modeling and analysis of a microturbine generation system," IEEE Power Engineering Society Summer Meeting, vol .1, pp. 167 -169, 2002.

[10] M. Suter, "Active filter for a microturbine," IEE Proc. Telecom. Energy Conf., pp. 162-165, Oct 2001.

[11] F. Jurado, and J.R. Saenz, "Adaptive control of a fuel cell-microturbine hybrid power plant," IEEE Trans. on Energy conversion, Vol. 18, no. 2, pp. 342-347, Jun 2003.

[12] D.N. Gaonkar, and R.N. Patel, "Modeling and simulation of microturbine based distributed generation system," IEEE Proc. Power India Conf., pp. 5 pp. Apr 2006.

[13] A.K.Saha, S.Chowdhury, S.P.Chowdhury and P.A.Crossley, Modelling and Simulation of Microturbine in Islanded and Grid-connected Mode as Distributed Energy Resource, 2008 IEEE, .pp 1-7

[14] Liu B, Wang L, Jin YH, Huang DX, Tang F. Control and synchronization of chaotic systems by differential evolution algorithm. Chaos, Solitons & Fractals 2007;34(2):412–9.

[15] Chang WD. Parameter identification of Rossler's chaotic system by an evolutionary algorithm. Chaos, Solitons & Fractals 2006;29(5):1047–53.

[16] Coelho LS, Mariani VC. Improved differential evolution algorithms for handling economic dispatch optimization with generator constraints. Energ Convers Manage 2007;48(5):1631–9.

[17] Mariani VC, Lima AGB, Coelho LS. Apparent thermal diffusivity estimation of the banana during drying using inverse method. J Food Eng 2008;85(4):569–79.

[18] Price K. An introduction to differential evolution. In: Corne D, Dorigo M, Glover F, eds. New ideas in optimization. New York: McGraw-Hill; 1999. p. 79–108

[19] Leandro dos Santos Coelho, João Guilherme Sauer, Marcelo Rudek, Differential evolution optimization combined with chaotic sequences for image contrast enhancement, Chaos, Solitons and Fractals 42 (2009) 522–529