J. Basic. Appl. Sci. Res., 1(12)3149-3158, 2011
© 2011, TextRoad Publication

ISSN 2090-4304
Journal of Basic and Applied Scientific Research
www.textroad.com

Incorporating Corrected Transient Energy Margin to the Clearing of Coupled Energy and Reactive Power Market

Abdolreza Rabiee[1,*], Roozbeh Kamali[2] and Hassan Feshki Farahani[1]

[1] Department of Electrical Engineering, Ashtian Branch, Islamic Azad University, Ashtian, Iran
[2] Shahid Sattari Aeronautical University of Science and Technology

ABSTRACT

This paper incorporates Corrected Transient Energy Margin (CTEM) to the clearing of coupled energy and reactive power market in the form of multi objective framework which includes two objective functions. The first one is the minimization of offer cost of generators for their active power generation in energy market plus Total Payment Function (TPF) of generators for reactive power compensation. The second objective function is Corrected Transient Energy Margin (CTEM). The Optimal Power Flow (OPF) is used to clear the coupled market which is solved by implementing Multiobjective Mathematical Programming (MMP) using ε-constraint method. The proposed coupled market framework is studied based on the well-known New-England 39-bus test system.

KEY WORDS: AC Corrected Transient Energy Margin (CTEM), Coupled Market Clearing, Reactive Power Market, Total Payment Function (TPF), Multiobjective Mathematical Programming (MMP).

I. INTRODUCTION

In deregulated environment, when talking about electricity markets, one usually refers to energy market paying less attention to reactive power market. Active and reactive powers are however coupled with together through the AC power flow equations and branch loading limits as well as the synchronous generators capability curve [1]. Accordingly, the sequential approach for energy and reactive power markets cannot present the optimal solution due to interactions between these markets. For instance, clearing of reactive power market can change the active power dispatch (e.g., due to change of transmission system losses, flow limits of branches and capability curve limitation), which can lead to degradation of the energy market clearing point. Therefore, considering a day-ahead market for reactive power, this paper proposes a coupled energy and reactive power market. In recent years, some papers are published in the area of optimal pricing of reactive power, which are based on the well-known marginal price theory to determine optimal prices for reactive power [2-7]. Bhattacharya et al. have designed a competitive reactive power market [8-11]. In [9], the generator Expected Payment Function (EPF) as well as generator reactive power capability curve has been used to analyze the reactive power costs and subsequently construct a four-component bidding framework for synchronous generators. Mitigating market power, a localized reactive power market is proposed in [10]. In [11], a pricing mechanism has been proposed for the other compensators of reactive power (e.g. shunt capacitors, SVCs) in the competitive market. In [12], a two-level framework is proposed for the operation of a competitive reactive power market taking into account system security aspects. In that work, reactive power procurement is considered as an essentially long-term issue on seasonal basis. However, seasonal market for reactive power encounters problems discussed in [13]. Therefore paper presents a day-ahead reactive power market which is cleared simultaneously with energy market in the coupled framework.

Deregulation of the electric power industry tends to further increase the security problems in modern power systems. The power system security problems are classified as static and dynamic. The static security problem implies evaluating the system steady state performance for all possible contingencies. This means neglecting the transient behavior and any other time-dependent variations due to load-generation conditions. The dynamic analysis of security evaluates the time-dependent transition from the pre-contingent state to the post-contingent state [14]. Some works are presented which are based on a static analysis framework [15-19]. On the other hand, considering static security cannot guarantee global security of a power system. While the steady state operating points of power system are deemed secure, its stability margins may severely decrease along the transition path of a contingency and even the power system may lose its stability in the transition period [20, 21]. On the other hand, dynamic security constrained dispatch of an electric power network is a challenging task.

Methods normally employed for dynamic security assessment are based on time domain simulation [22] and direct methods [23]. Time domain simulation method is implemented by solving the state space differential equations of power networks and then determines transient stability. Results of time-domain simulation are the most accurate and reliable ones with respect to other methods. However, time-domain method was proven to be slow because they require numerical integration of large families of dynamic equations. Moreover, they do not provide any information about the degree of stability (or instability) of the system [24]. Direct methods such as the transient energy function (TEF) method determine transient stability without solving differential state space equations of power systems. On the other hand, the main advantages of the TEF approach are computational speed and the ability of providing a security margin or index to evaluate the degree of stability. However, the method sometimes fails to yield a practical result because of non-convergence

***Corresponding Author:** Abdolreza Rabiee, Department of Electrical Engineering, Ashtian Branch, Islamic Azad University, Ashtian, Iran.
Email: hfeshki@yahoo.com Tel.: +98 (912) 2586069; fax: +98 862 7222627

problems encountered in attempting to compute the relevant "unstable equilibrium point," especially in the case of stressed systems [24]. This shortcoming has been overcome in the hybrid approach which combines time-domain simulation and transient energy analysis [25]. However, in [24] it has been shown that the hybrid approach may lead to unreliable results in evaluating control tools for stability enhancement. To remedy this problem, the corrected hybrid method combining time-domain simulation and corrected transient energy function (CTEF) has been proposed [24-26]. The CTEF is really a method for computing a stability index called the corrected transient energy margin (CTEM). An important feature of the CTEM is that it bears a linear relationship, within a usable range, to important control variables such as generator power exchanges [24–26].

II. THE PROPOSED METHOD

For the clearing of the coupled multiobjective market, in the proposed method the following two objective functions are used which will be described in detail in the next subsections:

$$MultiObjectiveFunctions: \begin{cases} Min\ (F1) \\ Max\ (F2) \end{cases} \tag{1}$$

Where:

F_1: Minimization of the offer cost of generators for their active power generation plus Total Payment Function (TPF) of generators for reactive power compensation plus Lost Opportunity Cost (LOC).

F_2: Maximization of CTEM

A. Minimization of F1

In order to formulate the coupled market, first the decoupled energy and reactive power markets are briefly discussed. Then the coupled energy and reactive power market is formulated and its main objective function (F_1) is introduced.

B. Decoupled energy market

In the energy market, the ISOs usually use an auction mechanism that minimizes the total offer cost to select generating units and their capacity levels for energy market and then use a market clearing price settlement mechanism (Pay-at-MCP) to determine the corresponding payments for the selected generating units in the market settlement [27-29]. Accordingly, the objective function of energy market, considering system demand is given, can be written as follows:

$$Minimize \sum_{i=1}^{NB}\left(\rho_e^i . \tilde{P}_G^i\right) \tag{2}$$

where ρ_e^i is bid price for the unit of ith bus for energy and $\tilde{P}_G^i$ is the energy output of unit in i^{th} bus in the energy market; NB is the number of system buses.

C. Decoupled reactive power market

In this subsection, the generator Expected Payment Function (EPF) proposed in [9] is briefly reviewed. The reactive power capability curve of a generator is shown in Fig. 1 [9]. Q_{base} is the reactive power required by the generator for its auxiliary equipment. If the operating point lies inside the limiting curve, e.g. (P_A , Q_{base}), then the unit can increase its reactive generation from Q_{base} to Q_A without requiring the adjustment of P_A. However, this will result in increased loss of winding and, hence, increase the cost of loss. If the generator operates on the limiting curve (field current limit), any increase in Q will require a decrease in P_A to adhere to the winding heating limit. Consider the operating point "A" on the curve defined by (P_A, Q_A). If more reactive power is required from the unit, for example Q_B, the operating point requires shifting back along the curve to point (P_B, Q_B), where $P_B < P_A$.

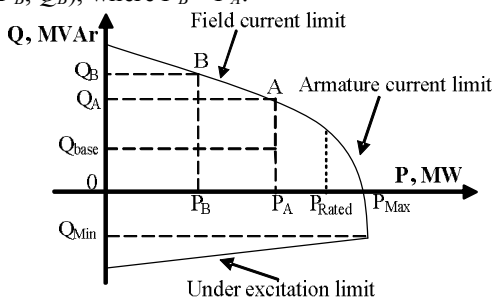

Fig. 1. Synchronous generator capability curve.

This indicates that the unit has to reduce its active power output to adhere to the field heating limits when higher reactive power is demanded. The lost revenue of generator due to the reduced production of active power is termed LOC and is a significant issue in reactive power pricing. Thus, the EPF contains the cost of loss component in addition to availability component. Finally in region-III (Q_A to Q_B), the generator is managed to reduce its active power to generate the required reactive power. Thus, the generator incurs loss of revenue cost and consequently, the EPF will contain all components of cost (availability cost, cost of loss and opportunity cost). Accordingly, the EPF can be determined in any operating condition of synchronous generator. The EPF of a generator as a function of the amount of generator reactive power production is shown in Fig. 2 [9].

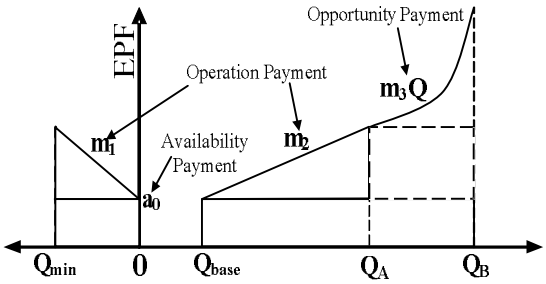

Fig. 2. Reactive power offer structure of provider.

Based on the above explanation, three operating regions for a generator on the reactive power coordinate can be defined with this assumption that the active power output of the generator is P_A. In region-I (0 to Q_{base}), the provided reactive power of generator is necessary for the generator own requirements to maintain its auxiliary equipment. Therefore, the generated reactive power in this region is not considered as an ancillary service to be remunerated nor the generator entitled to payments. In region-II (Q_{base} to Q_A) and (0 to Q_{min}), because of generating or absorbing reactive power, losses of generator increase and therefore it can expect to be paid for its service. According to the classification of reactive power production cost, an offer structure is formulated mathematically as the following equation [9]:

$$EPF_G^i = a_0^i + \int_{Q_{Min}}^{0} m_1^i \, dQ_G^i + \int_{Q_{base}}^{Q_A} m_2^i \, dQ_G^i + \int_{Q_A}^{Q_B} m_3^i \, Q_G^i \, dQ_G^i \tag{3}$$

The coefficients in (3) represent the various components of reactive power cost incurred by the provider connected to the ith bus needed to be offered in the reactive power market where a_0^i is availability price offer in dollars, m_1^i is cost of loss price offer for operating in under excited mode ($Q_{min} < Q \leq 0$) in \$/MVAr-h, m_2^i is cost of loss price offer for operating in region ($Q_{base} \leq Q \leq Q_A$) in \$/MVAr-h and m_3^i is opportunity price offer for operating in region ($Q_A \leq Q \leq Q_B$) in \$/MVAr-h/MVAr-h (Fig. 2). As shown in Fig. 2, the opportunity cost is a quadratic function of Q. The reactive power market is settled based on the minimization of total payment to the participants of the market [8-10]. The total payment will depend on the market price of the four components of the reactive power compensation costs offered by the producers. The total payment function (TPF) is mathematically formulated as follows [8-10]:

$$TPF = \sum_{i=1}^{NB} \begin{pmatrix} \rho_0 \, W_0^i - \rho_1 W_1^i \, Q_{1G}^i \\ + \rho_2 \, W_2^i \, (Q_{2G}^i - Q_{baseG}^i) \\ + \rho_2 \, W_3^i \, (Q_{3G}^i - Q_{baseG}^i) \\ + \frac{1}{2} \rho_3 \, W_3^i \left(\left(Q_{3G}^i\right)^2 - \left(Q_{AG}^i\right)^2 \right) \end{pmatrix} \tag{4}$$

where Q_{1G}^i, Q_{2G}^i, and Q_{3G}^i are in the regions (Q_{Min} to 0), (Q_{base} to Q_A) and (Q_A to Q_B), respectively for the unit connected to i^{th} bus; W_1^i, W_2^i, and W_3^i are binary variables, showing the compensation region of the unit connected to i^{th} bus, respectively. Also ρ_0 is the uniform auction availability price, ρ_1 and ρ_2 are the uniform auction price of loss prices for absorption and production of reactive power, respectively, and ρ_3 is the uniform auction opportunity price. The uniform auction price of each component is the highest accepted price offer for that component in the market (the principle of the highest priced offer selected). If the unit connected to i^{th} bus is selected by the ISO, W_0^i will be equal to one and it will receive the availability price, regardless of its reactive power output. However, only one of the binary variables W_1^i, W_2^i, and W_3^i can be selected. In other words, $W_1^i + W_2^i + W_3^i = 1$.

D. LOC consideration in decoupled and coupled markets

In decoupled reactive power market, if a generator is needed to decrease its active power output determined earlier in the energy market to meet system reactive power requirement, it is paid for LOC payment. According to (4), the LOC payment is a quadratic function of produced reactive power. In the coupled market, like decoupled reactive power market, a generator will be paid for LOC if its active power output in the coupled market is less than that of energy-only market [30]. However, the LOC payment in the proposed coupled market is formulated in a different way compared with that of decoupled reactive power market. The quadratic term of TPF in decoupled reactive power market, i.e. the last term in the large parentheses of (4), is related to LOC payment. On the other hand, in the coupled market, the LOC of a generating unit is calculated based on its bid price in the energy-only market as well as the MCP of energy-only market as:

$$LOC_G^i = max\left\{ 0, \, LOP_G^i (P_{G0}^i - P_G^i) \right\} \tag{5}$$

where P_{G0}^i and P_G^i represent the active power output of the unit connected to i^{th} bus in the energy-only market and

coupled market, respectively. LOP_G^i is defined as follows:

$$LOP_G^i = \begin{cases} \rho_{e,MCP} - \rho_e^i & if \quad \rho_{e,MCP} > \rho_e^i \\ 0 \quad if & \rho_{e,MCP} \le \rho_e^i \end{cases} \tag{6}$$

where ρ_e^i indicates the bid price of the generator connected to the ith bus and $\rho_{e,MCP}$ represents market clearing price of the energy-only market. From (6), it can be stated that only the units accepted in the energy-only market might be paid for LOC and the units not accepted in the energy-only market are no longer paid for LOC payment.

Hence, in the proposed coupled market, the quadratic term of TPF related to the LOC payment is removed and substituted by the new formulation described in (5) and (6). So, the TPF for reactive power compensation in the coupled market only includes availability and operation payments as follows:

$$TPF = \sum_{i=1}^{NB} \begin{pmatrix} \rho_0 \, W_0^i - \rho_1 W_1^i \, Q_{1G}^i \\ + \, \rho_2 \, W_2^i \, (Q_{2G}^i - Q_{baseG}^i) \end{pmatrix} \tag{7}$$

The two regions (Q_{base} to Q_A) and (Q_A to Q_B) are merged in (7) compared with (4), since the both regions have the same operation payment (the quadratic term of the region (Q_A to Q_B) has been eliminated).

E. Coupled Energy and Reactive Power Market

The objective function of the coupled energy and reactive power market is composed of offer cost of generating units for their active power production, TPF of units for their reactive power compensation, and the LOC payment of units. Accordingly, the main objective function of the proposed multiobjective framework, i.e. F_1, which is in fact the objective function of the coupled energy and reactive power market, is as follows:

$$F_1 : \; Min \begin{bmatrix} \sum_{i=1}^{NB} \left(\rho_e^i P_G^i \right) + \sum_{i=1}^{NB} \begin{pmatrix} \rho_0 \, W_0^i - \rho_1 W_1^i \, Q_{1G}^i \\ + \, \rho_2 \, W_2^i (Q_{2G}^i - Q_{baseG}^i) \end{pmatrix} \\ + \sum_{i=1}^{NB} \left(LOC_G^i \right) \end{bmatrix} \tag{8}$$

Subject to the following equality and inequality constraints:

1) Load flow constrains:

$$P_G^i - P_{Di} = \sum_{j=1}^{NB} V_i . V_j . Y_{ij} . cos\left(\delta_i - \delta_j - \theta_{ij} \right) \tag{9}$$

$$Q_G^i - Q_{Di} = \sum_{j=1}^{NB} V_i . V_j . Y_{ij} . sin\left(\delta_i - \delta_j - \theta_{ij} \right) \tag{10}$$

i, j	The buses indices
P_G^i	Active power generation of the unit of the ith bus in coupled market
P_{Di}	Active power demand at bus i
Q_G^i	Reactive power generation of the unit of the ith bus
Q_{Di}	Reactive power demand at bus i
V	The magnitude of voltage
δ	The angle of voltage
$S_{b,i}$	Apparent power of branch i
Y_{ij}	Magnitude of element k and j of admittance matrix
θ_{ij}	Angle of element k and j of admittance matrix

2) The operation constraints of generators for reactive power compensation:

$$W_0^i , W_1^i , W_2^i \in \{0,1\} \tag{11}$$

$$Q_G^i = Q_{1G}^i + Q_{2G}^i \tag{12}$$

$$W_1^i . Q_{\min G}^i \le Q_{1G}^i \le 0 \tag{13}$$

$$W_2^i . Q_{baseG}^i \le Q_{2G}^i \le W_2^i . Q_{\max G}^i \tag{14}$$

$$W_1^i + W_2^i \le W_0^i \tag{15}$$

$$Q_G^i \le \sqrt{V_t^i . I_a^{i\,2} - \left(P_G^i \right)^2} \quad \text{Capability Curve limit} \tag{16}$$

$$Q_G^i \le \sqrt{\left(\frac{V_t^i \,.E_{af}^i}{X_s^i}\right)^2 - \left(P_G^i\right)^2} - \frac{\left(V_t^i\right)^2}{X_s^i} \tag{17}$$

When the unit of ith bus is not selected or is selected and operated in the absorption region [Q_{minG},0] or production region [Q_{base},Q_{maxG}] then the constraint (15) is satisfied in the equality form (0=0 and 1=1, respectively). However, when unit of ith bus is selected for reactive reserve then this constraint will be satisfied in the inequality form (0<1).

3) Constraints related to determination of MCPs in reactive power market:

$$W_0^i \,.\, a_0^i \le \rho_0 \tag{18}$$

$$W_1^i \,.\, m_1^i \le \rho_1 \tag{19}$$

$$W_2^i \,.m_2^i \le \rho_2 \tag{20}$$

Security constrains:

$$S_{b,l} \le S_{b,l}^{\max} \tag{21}$$

$$V_i^{\min} \le V_i \le V_i^{\max} \tag{22}$$

Equations (21) to (22) include security constraints.

Maximization of F2 : Corrected Transient Energy Margin (CTEM)

In order to incorporate dynamic security aspect into the proposed MMP for the coupled multiobjective market clearing, CTEF as a well-known and widely-used transient stability index is employed. Theoretically, it is proved that CTEF is of conservation during post-fault transient period and there is no erratic nonlinearity exhibited on the variation of CTEM both for plant and inter-area mode disturbances [26]. Consequently, CTEM establishes a linear and proper criterion to evaluate transient stability. In the following, at first a brief review of the basic concepts of CTEF is presented and then CTEM is formulated as the second objective function of the MMP problem of the joint market clearing.

To introduce CTEF, consider the angle space of generators as shown in Fig. 3, where the fault is applied at S_0. If the fault is cleared at time t_A, the system goes on the stable trajectory of TR_A ending to a new stable equilibrium point of S_A.

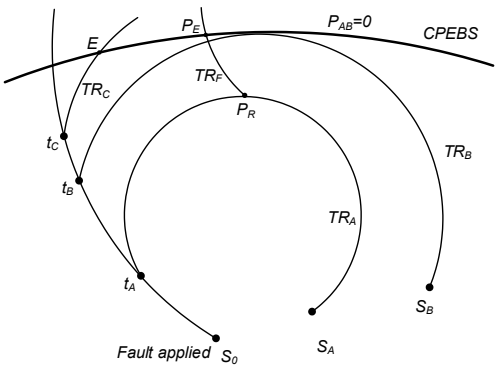

Fig. 3. Different trajectories for transient stability in angle space of generators

If the fault is cleared at time t_B, the system goes on the marginally stable trajectory of TR_B, also called critical trajectory. Corrected potential energy boundary surface (CPEBS) is the boundary surface where the accelerating power changes from negative to positive values. For clearing times beyond t_B, the system will be first swing unstable as shown by trajectory TR_C, which crosses CPEBS as shown in the Fig. 3. The crossing point called exit point indicated by E in the figure. After crossing CPEBS, the separation between the set of advanced generators (denoted by X) and non-advanced generators (denoted by Y) is more continued due to a positive accelerating power. To obtain the CTEM for stable cases, the fault is reinserted at the point of P_R, where the relative speed ω_{XY} becomes zero. After reinserting the fault, system goes on the trajectory TR_F, making the system to lose the stability at the point of P_E on CPEBS.

The motion between the set of advanced generators X and the set of non-advanced generators Y with respect to center of inertia (COI) can be written as [32]:

$$\begin{aligned} M_{eq}\,\dot{\omega}_{XY} &= \frac{M_{eq}}{M_X}\sum_{i=1}^{N_X}(P_{mi}-P_{ei}) \\ &-\frac{M_{eq}}{M_Y}\sum_{i=1}^{N_Y}(P_{mi}-P_{ei}) \equiv P_{XY} \end{aligned} \tag{23}$$

$$\alpha_{XY} = \alpha_X - \alpha_Y \,, \alpha_X = \sum_{i=1}^{N_X} M_i\alpha_i \,/\, M_X \,,\; \alpha_Y = \sum_{i=1}^{N_Y} M_i\alpha_i \,/\, M_Y \tag{24}$$

$$M_{eq} = M_X M_Y \,/\left(M_X + M_Y\right),\; \omega_{XY} = \omega_X - \omega_Y \tag{25}$$

$$\omega_X = \sum_{i=1}^{N_X} M_i \tilde{\omega}_i / M_X \,, \quad \omega_Y = \sum_{i=1}^{N_Y} M_i \tilde{\omega}_i / M_Y \tag{26}$$

$$M_X = \sum_{i=1}^{N_X} M_i \,, \; M_Y = \sum_{i=1}^{N_Y} M_i \tag{27}$$

Where N_X and N_Y refer to the number of advanced and non-advanced machines, respectively. It is noted that $N_X+N_Y=NU$. As shown above, ω_{XY} and α_{XY} is the speed and angle difference between the two sets of advanced and non-advanced generators, respectively. Corrected transient kinetic energy (CTKE) is the kinetic energy resulted from the speed difference. CTKE is the part of Transient Kinetic Energy (TKE) that contributes to a system separation leading to instability. P_{XY} as given by (23) is the accelerating power between the two sets of advanced and non-advanced generators. A positive P_{XY} implies a positive derivative of ω_{XY} or an increasing angular separation and vice versa. CTEF is defined as:

$$CTEF = CTKE + CTPE = \frac{1}{2} M_{eq} \omega_{XY}^2 - \int_{\alpha_{XY}^{SP}}^{\alpha_{XY}} P_{XY} d\alpha_{XY} \tag{28}$$

Where α_{XY}^{sp} denotes the value of α_{XY} at the stable equilibrium point (SEP) of the post-fault system. The CTEM for a first swing unstable post-fault trajectory is defined as the CTKE at its exit point E crossing the CPEBS. For a first swing stable trajectory, the CTEM is defined as the corrected transient potential energy (CTPE) increment evaluated along a re-inserted permanent fault trajectory TR_F from the CTPE peak (P_R) of the post-fault trajectory to its exit point on CPEBS (P_E) as shown in Fig. 3 [26]. In physical terms, the CTEM of stable cases gives a measure of how much more CTKE can be absorbed by the post-fault system and converted to CTPE without losing the stability [24]. Consequently, the CTEM evaluation can be summarized as the following step by step algorithm:

Step 1) Determine the system state at fault clearing and continue time simulation of the post-fault power system keeping track of ω_{XY} along the simulation trajectory. If ω_{XY} passes through a positive minimum value, go to step 2. If ω_{XY} changes its value from positive to negative, go to step 3.

Step 2) The case is first swing unstable: The CTEM is evaluated by $CTEM= -(1/2)M_{eq}(\omega_E)^2$, where ω_E is the value of ω_{XY} at CPEBS crossing point E on Fig. 3. In this case, the CTEM shows the instability depth.

Step 3) The case is first swing stable: Perform a "re-inserted fault-on" simulation commencing at the CTPE peak point P_R, then locate the exit point P_E of this trajectory (TR_F) on the CPEBS. Denote the system state at P_R by T_A and the state at P_E by T_B. The CTEM is defined by [24]:

$$CTEM = -\int_{\alpha_{XY}(T_A)}^{\alpha_{XY}(T_B)} P_{XY} d\alpha_{XY} \tag{29}$$

Based on (29), CTEM is positive for a transient stable system and measures its stability margin.

CTEM approximately has a linear relationship with respect to several operating parameters (including fault clearing time, pool generation rescheduling and curtailment of a bilateral transaction) over a wide range of operating conditions [24,26]. This linear relationship of CTEM change can be expressed as follows:

$$\Delta CTEM(P_{G1},...,P_{GNU}) = \sum_{j=1}^{NU} \frac{\partial CTEM}{\partial P_{Gj}} . \Delta P_{Gj} = \sum_{j=1}^{NU} SF_j . \Delta P_{Gj} \tag{30}$$

Where, SF_j refers to the sensitivity of CTEM with respect to the generation of unit j (P_{Gj}). To obtain the sensitivity of the system CTEM with respect to each generation shift, the first order approximation of the Taylor series for the CTEM around the operating point of the power system is used. In other words, each sensitivity factor is approximated by its first order term based on the approximate linear relationship of CTEM with respect to generation shifts. To compute the sensitivity of the CTEM with respect to the generation of unit j, a small perturbation is applied to this generation. Then the change in CTEM is calculated. The CTEM sensitivity with respect to the generation of unit j (SF_j) is obtained as:

$$\frac{\partial CTEM}{\partial P_{Gj}} \approx \frac{\Delta CTEM}{\Delta P_{Gj}} = \frac{CTEM_j - CTEM_0}{\Delta P_{Gj}} = SF_j \tag{31}$$

where, $CTEM_0$ is the network CTEM at the base case. Also, $CTEM_j$ shows the system CTEM after a little perturbation ΔP_{Gj} is applied to the generation of the unit j with respect to the base case. It should be noted that, $CTEM_0$ and $CTEM_j$ are calculated on the basis of the above step by step algorithm.

In order to maintain power system dynamic security in the market clearing process, CTEM based on the linearized formulation of (30) is considered as the second objective function f_2 of the MMP of the coupled market clearing (f_2 should be maximized):

$$f_2 = CTEM = CTEM_0 + \Delta CTEM = CTEM_0 + \sum_{j=1}^{N} SF_j . \Delta P_{Gj} \tag{32}$$

The objective function f_2 in (32) is computed based on a single fault. However, in practice, a list of credible contingencies (here, credible faults) is usually considered for a power system obtained from a contingency ranking method

[31]. So, we should consider a CTEM computed based on each credible contingency (fault trajectory in Fig. 3) as a separate objective function. In other words, we will have $f_2=CTEM_1,\ldots,f_{n+1}=CTEM_n$, for a list of n credible contingencies. The other alternative is combining the CTEM objective functions of the credible contingencies ($CTEM_1,\ldots, CTEM_n$) based on the weighted sum, with the weight value of each CTEM objective function determined according to the contingency ranking method [31], to construct a single objective function f_2 for all credible contingencies.

III. Multiobjective Mathematical Programming

In Multiobjective Mathematical Programming (MMP) there is more than one objective function and there is no single optimal solution that simultaneously optimizes all the objective functions. In these cases, the decision makers are looking for the "most preferred" solution. In MMP, the concept of optimality is replaced with that of efficiency or Pareto optimality. The efficient (or Pareto optimal, nondominated, non-inferior) solution is the solution that cannot be improved in one objective function without deteriorating its performance in at least one of the rest. In order to deal with the MMP problem of coupled multiobjective market clearing, according to (1), two objective functions F_1, F_2 are taken into account, described in (8), (32) respectively. A well-organized technique to solve MMP problems owning one main objective function among all objective functions is the ε-constraint method which is explained in details in [13]. This method is selected to solve the MMP problem of coupled multiobjective market clearing considering F_1 as the main objective function of the problem.

After obtaining the Pareto-optimal solutions by solving the optimization subproblems, the decision-maker needs to choose one best compromise solution according to the specific preference for different applications. In this paper a fuzzy approach presented in [13], is used for the decision making process wherein a linear membership function (μ_i) is defined for each of the objective functions, i.e. F_1, F_2.

IV. Numerical Results

The proposed multiobjective coupled market is studied on the well-known New-England test system, since its static and dynamic data are available. The single line diagram of the test system is illustrated in Fig. 4, which consists of 39 buses, 34 lines, 2 shunt capacitors, 12 transformers, 19 loads, and 10 machines. Data of the test system are taken from [33]. Table 1 shows the additional data of the New-England test system including units bid data, their operating limits Data for generation units and the sensitivity of the CTEM with respect to each generation. Total system demand is 61.505 pu [33]. Using the mentioned approach in the (29) to (32) the CTEM for base case is determined as 0.12828 pu. Here, S_{base}=100 MVAR. Also for reactive power market, the participants of reactive power market are supposed to submit their four components of offer prices (a_0, m_1, m_2, m_3).

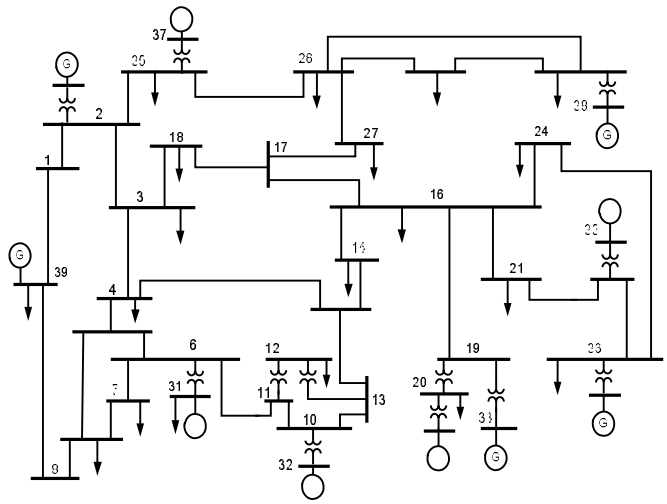

Fig. 4. The single-line diagram of the New-England 39-bus test system [32]

In this examination, a uniform random number generator is used to simulate the offer prices of generators shown in Table 2 [9].

Table 1: Data for generation units and the sensitivity of the CTEM with respect to each generation

Bus No.	Bid ($/MWh)	P_{Min} (MW)	P_{Max} (MW)	Energy output(pu) (base case)	SF_j (* 10^{-3})
30	120	100	400	2.50	**1.13**
31	50	100	1200	5.21	**-25.59**
32	70	100	800	6.50	**-18.48**
33	40	100	750	6.32	**-46.34**
34	40	100	600	5.08	**-54.86**
35	35	100	750	6.50	**-54.29**
36	35	100	650	5.60	**-48.18**
37	40	100	600	5.40	**-33.40**
38	20	100	950	8.30	**-493.74**
39	**80**	**100**	**1100**	**10.00**	**0.000**

The participants are also required to send their Q_{base}, Q_{min} and Q_{max}. In this paper, Q_{base}=0.1×Q_{max} is assumed. However, it should be mentioned that, in the coupled market, the participants of reactive power market bid (a_0^i, m_1^i, m_2^i) and the component related to LOC payment (m_3^i) is not required because the LOC payment of participants in the coupled market is calculated based on the new formulation presented in (5) and (6). To get more accurate results, the integration time step is reduced to 0.1ms. The MINLP-based multi-objective optimization problem is modeled in GAMS software package using DICOPT solver [35].DICOPT is an efficient solver for MINLP problems, which is widely used by researchers in the area [8-9]. The multiobjective optimization problem of the proposed method is solved by is the ε-constraint method which is explained in details in [13] that F_1 (coupled market costs minimization) is considered as the main objective function and F_2 (CTEM maximization) is as the constraint based on ε-constraint method. It is noted that, equal weighting factors are given to the two objective functions F_1 , F_2 [13].

Table 2: Reactive power bid of generation units

Bus No.	a_0 ($)	m_1 ($/MVar-h)	m_2 ($/MVar-h)	m_3 ($/MVar-h^2)
30	0. 96	0.86	0.86	**0.46**
31	0.50	0.54	0.54	**0.45**
32	0. 25	0.61	0.61	**0.39**
33	0.85	0.50	0.50	**0.40**
34	0.48	0.81	0.81	**0.28**
35	0.11	0.60	0.60	**0.35**
36	0.63	0.50	0.50	**0.39**
37	0.45	0.85	0.85	**0.37**
38	0.40	0.75	0.75	**0.43**
39	**0.26**	**0.42**	**0.42**	**0.36**

In other words, in this examination $W_1 = W_2 = 0.5$. More details and description about weighting factors can be found in [13]. In this study $q_2 = 6$. Therefore, the optimization problem is solved (q_2 +1= 7) times to find the pareto optimal solutions of the coupled multiobjective framework of which 5 feasible pareto solution and 2 infeasible solution are obtained[13]. The five feasible pareto solutions are taken in Table 3.

Table 3:The pareto optimal solutions of optimization problem

Pareto No	F1		F2		Total Membership function
	Coupled market Cost ($)	Membership function	CTEM	Membership function	
1	307127.5	0.9673	15.2349	0.0708	0.5190
2	307722.5	0.9629	15.9134	0.1000	0.5315
3	357472.2	0.5970	18.2358	0.2000	0.3985
4	369821.6	0.5062	20.5582	0.3000	0.4031
5	373437.6	0.4796	22.8806	0.4000	0.4398

From this table one can see that as the CTEM is increased, the objective function F_1 is more deteriorated and coupled market costs are also increased. This manner shows the competing nature of these two objective functions. The best compromise solution however, can be selected among the feasible pareto solutions can be selected by using a fuzzy approach presented in [13]. The pareto optimal solutions of the proposed coupled multiobjective framework is graphically shown in Fig. 5. The results of reactive power market are shown in Table 4. From this table, it is observed that some the reactive power of some units (unit at bus 31 for example) are zero; however, they are paid the availability payment. This is for the reason that the Independent System Operator (ISO) accepts such units in the reactive power market to have enough reactive reserve in the system.The total payment for reactive power is only 158.412$ taken in the last column of Table 4.

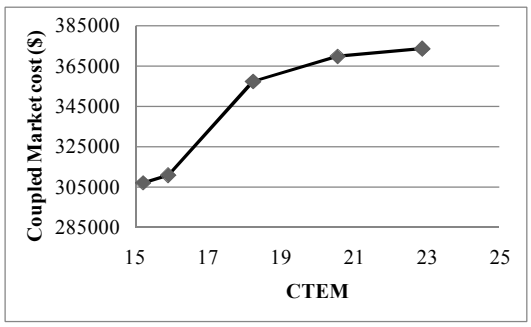

Fig. 5. The pareto optimal solutions of the proposed coupled multiobjective framework

So, by the proposed method, the ISO can operate in such a way that the payment of coupled market is minimized as much as possible while maximizing the CTEM.

Table 4: The results of reactive power market

Gen. Bus	Reactive power output (MVar)	Payment ($)
30	2.04	**178.44**
31	-0.00	**0.50**
32	3.784	**331.453**
33	-0.00	**0.85**
34	-0.00	**0.48**
35	-0.00	**19.494**
36	1.814	**158.412**
37	1.510	**132.895**
38	0.00	**0.00**
39	1.360	**118.960**
Total	**10.508 MVAr**	**TPF = 941.484 ($)**

V. Conclusion

This paper proposes a multiobjective coupled energy and reactive power market, incorporating CTEM. The main objective function of the coupled framework is the coupled energy and reactive power market costs, to be minimized, while the other objective function is system CTEM that should be maximized. Besides that, in this paper, security aspects of power system as one of the main responsibilities of ISOs are incorporated in the clearing of the coupled market based on the multiobjective optimization based on MINLP formulation. The proposed scheme in fact permits the system operators in the day-ahead coupled energy and reactive power market clearing to consider CTEM as extra objective functions. In the suggested multiobjective approach, ISOs will be able to directly manage the desired level of system security by controlling the different objective functions, which is not possible in typical security constrained market clearing. The proposed method can compromise the conflicting objectives of market clearing procedure in such a way that the ISO's concerns about system CTEM is relieved with tolerable and reasonable coupled market cost. Furthermore, due to coupling of active and reactive powers with together through the AC power flow equations and branch loading limits, the solution obtained from a coupled multiobjective OPF formulation simultaneously dispatching active and reactive powers is closer to the optimal.

VI. References

[1] M. H. R. Gomes, J. T. Saraiva, Active/reactive bid based dispatch models to be used in electricity markets. Electric Power Systems Research. *vol*. 78, *n.* 1, 2008, pp. 106-21.

[2] M. L. Baughman, S. N. Siddiqi, Real time pricing of reactive power: theory and study results. IEEE Trans. Power Syst. *vol.* 6, *n.* 1, 1991, pp. 23-29.

[3] A. A. El-Keib, X. Ma, Calculating short-run marginal costs of active and reactive power production. IEEE Trans. Power Syst.; *vol.* 12, *n*. 2, 1997, pp. 559-65.

[4] J. Y. Choi, S. H. Rim, J. K. Park, Optimal real time pricing of real and reactive powers. IEEE Trans. Power Syst. *vol.* 13, *n.* 4, 1998, pp. 1226-31.

[5] J. B. Gil, T. G. S. Román, J. J. A. RÍo, P. S. MartÍn, Reactive power pricing: A conceptual framework for remuneration and charging procedures. IEEE Trans. Power Syst. *vol.* 15, *n*. 2, 2000, pp. 483-9.

[6] S. Ahmed, G. Strbac, A method for simulation and analysis of reactive power market. IEEE Trans. Power Syst. *vol.* 15, *n.* 3, 2002, pp. 1047-52.

[7] X. J. Lin, C. W. Yu, C. Y. Chung, Pricing of reactive support ancillary services. IEEE Proc_Gener. Transm. Distrib. *vol.* 152 *n.* 5, 2005, pp. 616-22.

[8] K. Bhattacharya, J. Zhong, Reactive power as an ancillary service. IEEE Trans. Power Syst. vol. 16, n. 2, 2001, pp. 294-300.

[9] J. Zhong, K. Bhattacharya, Toward a competitive market for reactive power. IEEE Trans. Power Syst. *vol.* 17, *n.*4, 2002, pp. 1206-15.

[10] J. Zhong, E. Nobile, A. Bose, K. Bhattacharya, Localized reactive power markets using the concept of voltage control areas, IEEE Trans. Power. Syst. *vol*. 19, *n.* 3, 2004, pp.1555-61.

[11] J. Zhong, A pricing mechanism for network reactive power devices in competitive market. IEEE Power India Conference 2006.

[12] I. El-Samahy, K. Bhattacharya, C. A. Cañizares, M. F. Anjos, J. Pan, A procurement market model for reactive power services considering system security. IEEE Trans. Power Syst. *vol*. 23, *n.* 1, 2008, pp.137-49.

[13] A. Rabiee, H. A. Shayanfar, N. Amjady, Multiobjective clearing of reactive power market considering power system security. Applied Energy, *vol*. 86, *n.* 9, 2009, pp. 1555-64.

[14] R. B. Alder, Security consideration economic dispatch with participation factors, IEEE Trans. Power Apparatus and Systems, PAS-96, 1977.

[15] C. A. Canizares, K. M. Kodsi, Power system security in market clearing and dispatch mechanisms, Power Systems Conference and Exposition, 2006, pp. 402 - 402,

[16] M. Aganagic, K. H. Abdul-Rahman, and J. G. Waight, Spot pricing for generation and transmission of reserve in an extended Poolco model, IEEE Trans. on Power Syst. *vol.* 13, *n.* 3, 1998, pp. 1128–35.

[17] K. W. Cheung, P. Shamsollahi, D. Sun, J. Milligan, and M. Potishnak, Energy and ancillary service dispatch for the interim ISO New England electricity market, IEEE Trans. on Power Syst., *vol.* 15, *n.* 3, 2000, 968-74.

[18] J. M. Arroyo and F. D. Galiana, Energy and reserve pricing in security and network constrained electricity markets, IEEE Trans. Power Syst., *vol.* 20, *n.* 2, 2005, pp. 634-43.

[19] F. Milano, C. A. Cañizares, and M. Invernizzi, Multi-objective optimization for pricing system security in electricity markets, IEEE Trans. on Power Syst., *vol.* 18, *n.* 2, 2003, pp. 596-604.

[20] T. S. Chung, D. Z. Fang, K. Cui, and K. P. Wong, An online preventive control approach for dynamic security of power transmission using a database system, International Journal of Electrical Power & Energy Systems, *vol.* 28, *n.*2, 2006, pp. 142-7.

[21] S. N. Singh, and A. K. David, Optimal dispatch in dynamic security constrained open power market, International Journal of Electrical Power & Energy Systems, *vol.* 24, *n.*5, 2002, pp. 363-9.

[22] D. Z. Fang, T. S. Chung, and A. K. David, Fast transient stability estimation using a novel dynamic equivalent reduction technique, IEEE Trans. Power Syst., *vol.* 9, 1994, pp. 995–1001.

[23] A. A. Fouad, V. Vittal, and T. Kyoo, Critical energy for direct transient stability assessment of a multimachine power system, IEEE Trans. Power Apparat. Syst., PAS-103, 1984, 2199–2206.

[24] A. K. David, and X. Lin, Dynamic security enhancement in power market systems, IEEE Trans. Power Syst. *vol.* 17, *n.* 2, 2002, pp. 431–8.

[25] G. A. Maria, C. Tang, and J. Kim, Hybrid transient stability analysis, IEEE Trans. Power Syst., *vol.* 5, 1990, pp. 384–91.

[26] D. Z. Fang, T. S. Chung, and Y. Zhang, and W. Song, Transient stability limit conditions analysis using a corrected transient energy function approach, IEEE Trans. Power Syst. *vol.* 15, *n.* 2, 2000, pp. 804–10.

[27] Rau NS. Optimal dispatch of a system based on offers and bids—a mixed integer LP formulation. IEEE Trans Power Syst. *vol.* 14 *n.* 1, 1999, pp. 274–9.

[28] Ma X, Sun D, Cheung K. Energy and reserve dispatch in a multi-zone electricity market. IEEE Trans Power Syst. *vol.* 14, *n.* 3, 1999, pp.913–9.

[29] Wu T, Rothleder M, Alaywan Z, Papalexopoulos AD. Pricing energy and ancillary services in integrated market systems by an optimal power flow. IEEE Trans Power Syst. *vol.* 19, *n.* 1, 2004, pp. 339–47.

[30] S. Hao, A Reactive power management proposal for transmission operators. IEEE Trans. Power Syst., *vol.*18, *n.* 4, 2003, pp. 1374-81.

[31] N. Amjady, M. Esmaili, Application of a new sensitivity analysis framework for voltage contingency ranking, IEEE Trans. on Power Syst. *vol.* 20, *n.* 2, 2005, pp. 973-983.

[32] P. Kundur, Power System Stability and Control, New York: McGraw-Hill, 1994.

[33] A. A. Fouad, V. Vital, Power System Transient Stability Analysis Using the Transient Energy Function Method, Englewood Cliffs, NJ: Prentice-Hall, 1992.

[34] PSS/E 30 user manuals, Shaw Power Technologies, Inc., USA, 2004.

[35] Generalized Algebraic Modeling Systems (GAMS), Available: http://www.gams.com.