J. Basic. Appl. Sci. Res., 1(11)2500-2503, 2011

ISSN 2090-4304
Journal of Basic and Applied Scientific Research
www.textroad.com

A Fast Face Detection Based on Multilayer Perceptron

MohammadaminDaneshvar, SadeqAminifar, and GhaderYosefi

Department of Electrical and Electronics Engineering, Mahabad Branch, Islamic Azad University, Mahabad, Iran

ABSTRACT

Proposed in this paper is the novel implementation of a high speed skin detector based on a multilayer perceptron. The proposed skin detector uses a multilayer perception with three inputs, one hidden layer, one output neuron and a saturating linear activation function to simplify the hardware implementation. Since the streak camera is the fastest available instrument enabling very high speed photonic phenomena to be observed by direct imaging, we have used it to produce three RGB signals for the first layer of perceptron. The current-mode fully analog skin detection processing circuitry increase speed of process.

Keywords:perceptron, image processing, activation function.

I. INTRODUCTION

Many face detection researchers have used the idea that facial images can be characterized directly in terms of pixel intensities. These images can be characterized by probabilistic models of the set of face images [1]-[2], or implicitly by neural networks or other mechanisms [3]-[4]. Artificial neural networks are inspired by the early models of sensory processing by the brain.An artificial neural network can be created by simulating a network of model neurons in a computer. By applying algorithms that mimic the processes of real neurons, we can make the network 'learn' to solve many types of problems.Neural networks have found use in a large number of computational disciplines. In the field of object and pattern recognition, neural networks are commonly used to perform such tasks as optical character recognition and face recognition. Pattern analysis is another field in which neural networks excel.In statistics, neural networks can be used to approximate functions and to interpolate missing data. and we can find many others application[5]-[9].

2.Training Set

Perceptron neural networks are broken up into a hierarchy of layers. The first layer, or the input layer, is relatively simple. It contains one neuron for each input value the network is to have. Each of these neurons is then connected to every neuron of the second layer. This second, or hidden, layer allows for the majority of the computational power of these networks. Each neuron is connected to every neuron in the previous layer. These connections are given a weight. The hidden layer neurons take the sum of the values of the connected neurons, multiplied by their respective weights. This sum is then fed into the activation function.The value of the neuron is then the result of this function. These values are passed along another series of weighted connections to the network's output layer. The output layer contains one neuron for each condition the network is checking for. These neurons function like those of the hidden layer, and the result of the sigmoid function yields the probability that this condition has been satisfied.In training neural networks, a large set of input data is assembled. The network is initialized with random weights at first, and the data is then fed into the network. As each data is tested, the result is checked. The square of the difference between the expected and actual result is calculated, and this data is used to adjust the weights of each connection accordingly. The accuracy of neural networks is mostly a function of the size of their training set rather than their complexity. Minimum number of neurons, connections, and layers is required for a perceptron to begin modelling accurately.

3.The Conventional Streak Camera

The streak camera is the fastest available instrument enabling very high speed photonic phenomena to be observed by direct imaging [10]. A streak camera can be compared to an optical oscilloscope since it analyses time events. The block diagram and the overall functionality of a conventional streak camera are depicted in Figure 1. The very core of such a device is usually a modified first- enervation sealed vacuum

Corresponding author: M. Daneshvar, Department of Electrical and Electronics Engineering, Mahabad Branch, Islamic Azad University, Mahabad, Iran. mdaneshwar@yahoo.com

image converter tube called "streak tube" comprising four main parts: a photon-to-electron converter, an electron bunch focusing stage, an electrostatic sweeping unit, and an electron-to-photon conversion stage. On some streak tubes, an internal Micro Channel Plate (MCP) is added in front of the phosphorus screen for amplification. In the next paragraph, the operation principle of the CSC is resumed. A mechanical slit is lightened by the time varying optical event to be measured. Here, a fast pseudo Gaussian optical pulse Ii(t,y) is assumed. Three arbitrarily identified photons are represented: the first (in green) in the early moment of the pulse, the second (in red) at the peak of the pulse, the third (in blue) at the end of the pulse. The spatial distribution of A lens is used to obtain the image of the mechanical slit on the photocathode of the streak tube. The photocathode produces photoelectrons with quantum efficiency depending on the energy of the incident photons and the nature of the photocathode. A mesh is placed in proximity of the photocathode and a high voltage is applied between these two components in order to generate a strong electrical field which extracts the photoelectrons from the photocathode and uniforms their velocities. An anode generally connected to the ground accelerates the pulse of photoelectrons, which is a direct electronic image of the optical pulse, fed in the tube. When the photoelectrons approach the deflection plates, a very fast voltage ramp *V(t)* of several hundreds of Volts per nanosecond is applied. Thus the first photoelectron considered is subjected to a negative voltage and is deflected to the bottom. At the arrival of the second photoelectron, the ramp crosses the zero voltage. Consequently, no deflection occurs and the photoelectron goes straight forward. When the last photoelectron arrives, the voltage of the ramp is positive and thus the photoelectron is deflected to the top of the tube. To resume, firstly a photo-electrical conversion is carried out at the level of the photocathode, then a translation from time to space is operated through the deflection plates. At the end of the streak tube, the photoelectrons are converted to photons by a phosphorus screen. The signal is most often amplified by an image intensifier added at the output of the screen or by an internal MCP directly integrated into the streak tube as shown on Figure 1. As the time varying electric field caused by *V(t)* between the plates is supposed uniform along the *y* axis, the spatial distribution of the light pulse is directly obtained at the output phosphorous screen without temporal modification, just up to a multiplicative scalar factor. The result is an image *Io(x,y),* where along the *y* axis the spatial distribution of the light pulse along the slit is represented. The *x* axis corresponds to the temporal evolution of the observed phenomena [10].

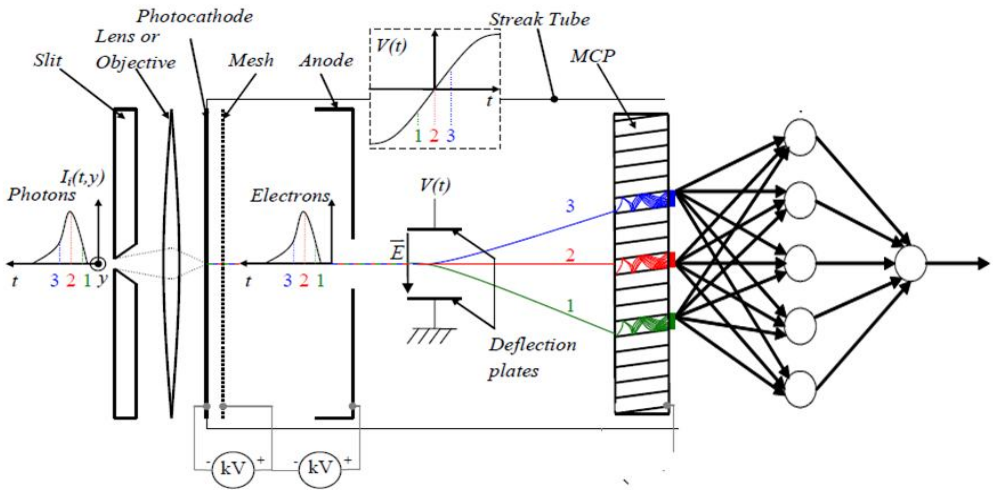

Fig.1: Face Detection Based on Multilayer Perceptron

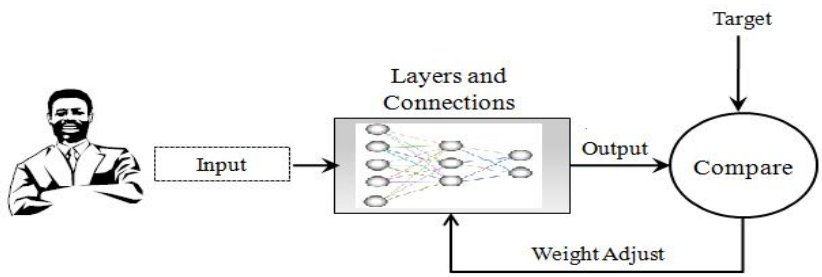

Fig.2: Mechanism of training and weight adjusting from samples.

4.Colour Capture

A fundamental requirement of the skin detection process is for the smart sensor to be able to detect the three fundamental components of visible light that are red, green and blue (RGB)[11].

The selection of the colour space that will be used in modelling skin colour is very important; it is well known that different people have different skin colour appearance, but these differences lie mostly in the colour intensity not in the colour itself. That is why many skin detection methods drop the luminance component of the colour space. Dropping the luminance component achieves two important goals; first the model will be independent of the differences in skin appearance that may arise from the difference in human race, or the difference in the lighting of the image; second the colour space dimensions will be reduced so the calculations would be easier. There are lots of colour spaces that have been used in early work of skin detection, such as RGB, normalized RGB, YCbCr, HIS and TSL [9]. Although RGB colour space is one of the most used colour spaces for processing and storing digital images, it is not widely used in skin detection algorithms because the chrominance and luminance components are mixed. Normalized RGB and YCbCr are often used by skin detection techniques. Some work has been done to compare different skin colour space performance in skin detection problems. The conclusion was that normalized colour space yields the best skin detection results. Normalized RGB colour space is obtained from RGB using simple normalization

The three normalized components r, g and b are called pure colours; they contain no information about the luminance. Also it can be deduced from the above equations that the sum of the three components is always equal to one, so it is enough to use only two components r and g to completely describe the skin colour space.

5.VLSI Implementation

Figure 3 depicts the proposed VLSI architecture for a CMOS image sensor integrating skin detection processing. The image sensor uses currents as pixel output signals to take full advantage of current-mode processing and enable real-time processing [12]-[13]. In the adopted current-mode approach, sums are computed by simply wiring the appropriate signals,and differences by means of simple current mirrors.

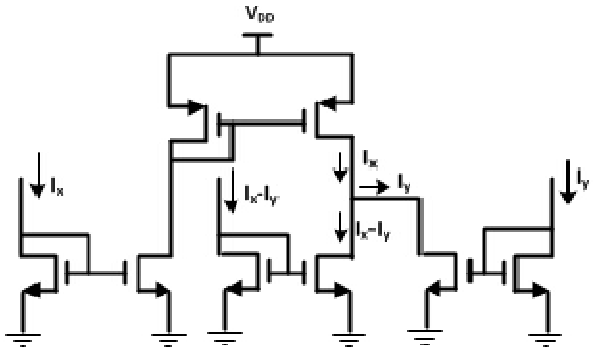

Fig.3: current-mode subtractor.

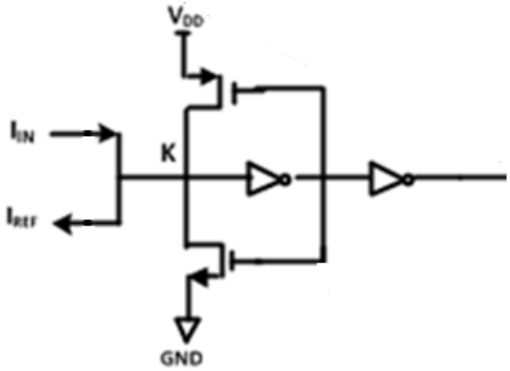

Fig.4: current-mode comparator

6. Conclusion

In this paper, we propose a novel method to detect skin colour that is suitable for VLSI implementation. The skin detector uses an MLP with three inputs, one hidden layer and one output neuron. a saturating linear activation function is necessary for perceptron.Since the streak camera is the fastest available instrument enabling very high speed photonic phenomena to be observed by direct imaging, we have used it to produce three RGB signals for the first layer of perceptron. To achieve best performance of system, we take advantages of analog current-mode circuits.

REFERENCES

[1] Antonio J. Colmenarez and Thomas S. Huang." Face detection with information-based maximum Discrimination", In Computer Vision and Pattern Recognition, pages 782–787, 1997.

[2] Alex P., Baback M., and Thad S.," View-based and modular eigenspaces for face recognition". In Computer Vision and Pattern Recognition, pages 84–91, 1994.

[3] Edgar O., Robert F., and Federico G.," Training support vector machines: an application to face detection". In Computer Vision and Pattern Recognition, pages 130–136,1997.

[4] Pawan S. ,"Object recognition via image invariants: A case study", Investigative Opthalmology and Visual Science, 35(4), march 1994.

[5] Shubao Liu; Jun Wang;" A Simplified Dual Neural Network for Quadratic Programming With Its KWTA Application", IEEE Transactions on Neural Networks, Volume: 17,2006, Page(s): 1500 – 1510.

[6] Kun-Chou Lee; Jhen-Yan Jhang; Tsung-Nan Lin;" An Automatically Converging Scheme Based on the Neural Network and Its Application in Antennas", IEEE Transactions on Antennas and Propagation, Volume: 57, 2009 , Page(s): 1270 – 1274.

[7] Mohamed A. H.," Review of the applications of neural networks in chemical process control — simulation and online implementation", Artificial Intelligence in Engineering, Volume 13, Issue 1, January 1999, Pages 55-68.

[8] Diego G. Loyola R." Applications of neural network methods to the processing of earth observation satellite data", Neural Networks, Volume 19, Issue 2, March 2006, Pages 168-177.

[9] Bahar C. E., Spiro E. S.," An application of neural networks in microeconomics: Input–output mapping in a power generation subsector of the US electricity industry", Expert Systems with Applications, Volume 36, Issue 2, Part 1, March 2009, Pages 2317-2326.

[10] W. Uhring, J.P. Normand, V. Zint, M. Zlatanski," Integrated Streak Camera in Standard (Bi) CMOS Technology", Proc. of SPIE Vol. 7719 77190V-1

[11] F. Boussaid , D. Chai, A. Bouzerdoum," On-chip skin color detection using a triple-well CMOS process"

[12] F. Ismail and T. Fiez, Analog VLSI Signal and Information Processing, McGraw Hill, 1994.

[13] E. Vittoz, "Analog VLSI signal processing: why, where and how?" Analog Integrated Circuits and Signal Processing, pp. 27-44, 1994.