J. Appl. Environ. Biol. Sci., 4(12S)118-127, 2015

ISSN: 2090-4274
Journal of Applied Environmental and Biological Sciences
www.textroad.com

Solutions to Design and Coordination Relays for Protection Challenges of Distribution Network with DG

Mohammad Zohour Attar[1], Nilofar Sasani[2]

[1]Department of Electrical Engineering, Shoush Branch, Islamic Azad University, Shoush, Iran,
[2]Department of Electrical Engineering, Shoushtar Branch, Islamic Azad University, Shoushtar, Iran.

Received: November 21, 2014
Accepted: January 5, 2015

ABSTRACT

In this paper in order to ensure that protection of the system remains reliable even after introduction of DG is studied key Protection Challenges of the DN with DG and established rules for the design and coordination of protective relays in a power system. Such as Differential Protection Schemes, A Balanced Combination of Different Types of DG Units for Grid Connection, Inverter Controller Design, Voltage-Based Detection Techniques, Adaptive Protection Schemes, Protection Based on Symmetrical and Differential Current Components, for describes a case study of a typical DN with DG. Various protection schemes for micro grids, both in grid-connected and islanded mode of operation, are explored. The techniques and strategies, such as analysis of current using digital signal processing for characteristic signatures of faults, development of a real-time fault location technique having the capability to determine the exact fault location in all situations, use of impedance methods, zero sequence current and/or voltage detection-based relaying, and differential methods using current and voltage parameters, have the potential for developing more robust protection schemes to cope with the new challenges.

KEYWORD*:* Microgrid, Protection, Fault Current Level Modification, Sympathetic Tripping, Blinding of Protection, Reduction in Reach of Impedance Relays

I. INTRODUCTION

The integration of distributed generation (DG) within microgrids into distribution networks (DNs) requires rethinking of traditional protection practices to meet new challenges arising from changes in system parameters. For example, fault current's magnitude and its direction can change when DG is introduced into a DN [1,2]. Coordination problems between different protective equipment's, that is, between relay, autorecloser, and sectionalized, can also occur. The level of penetration of DG and the type of interfacing scheme, that is, whether the DG system is based on direct coupling of rotating machines, like synchronous or induction generators, or it is interfaced through a power electronic converter, have a fundamental impact on the protection scheme as these determine the level of short circuit current in the system. The key protection issues which the protection engineer has to address in the new scenarioare short circuit power and FCL, device discrimination, reduction in reach of overcurrent(OC) and impedance relays, bi-directionality and voltage profile, sympathetic tripping, islanding, and maloperation of autoreclosers [2–8].

This paper critically discusses these issues and their solutions in the light of long-established rules for the design and coordination of protective relays in a power system, that is, selectivity, redundancy, grading, security, and dependability. In second section outlines key protection challenges for DNs with DG. Possible solutions to these challenges, including those for an islanded microgrid with inverter interfaced distributed generation (IIDG) units are discussed in Section3. Section 4 describes a case study of a typical DN with DG. Finally, Section 5 concludes the findings of the chapter.

2 Key Protection Challenges

2.1 Fault Current Level Modification

Connection to the DN of a single large DG unit or a large number of small DG units, that use synchronous or induction generators, will alter the FCL as both types of generator contribute to it. This change in FCL can disturb fuse-breaker coordination [2]. A different scenario results when IIDG units are connected to the DN; due to the controller of these interfaces (i.e., inverters), the fault current is limited electronically to typically twice the load current or even less [2–8]. Hence, an independent relay will not be able to distinguish between normal operation and

A fault condition without communicating with the inverter.

The fault impedance can also decrease when DG is introduced into the network in parallel with other devices. The reduced impedance results in high fault levels if the DG unit is a rotating machine or a converter with a low

*** Corresponding Author:** Mohammad Zohour Attar, Department of Electrical Engineering, Shoush Branch, Islamic Azad University, Shoush, Iran, Zohuratar@yahoo.com

output impedance without means of isolation from the DN. In the case of a failure, there can be unexpected high fault currents that would put the system components at risk.

The position of a fault point relative to a DG unit and a substation transformer also affects the operation of the protection system. When a fault occurs downstream of the point of common coupling (PCC), both the main source and the DG unit will contribute to the fault current, as shown in Figure 1. However, the relay situated upstream of the DG unit will only measure the fault current supplied by the upstream source. As this is only one part of the actual fault current, the relays, especially those with inverse time characteristics, may not function properly, resulting in coordination problems. When the fault is between the main source and a DG unit, then the fault current from the main source would not change significantly as, generally, a DG unit is comparatively small. So in respect of short circuit faults, the incorporation of DG affects the amplitude, direction, and duration of fault currents. The last phenomenon happens indirectly due to the inverse time–current characteristics of relays.

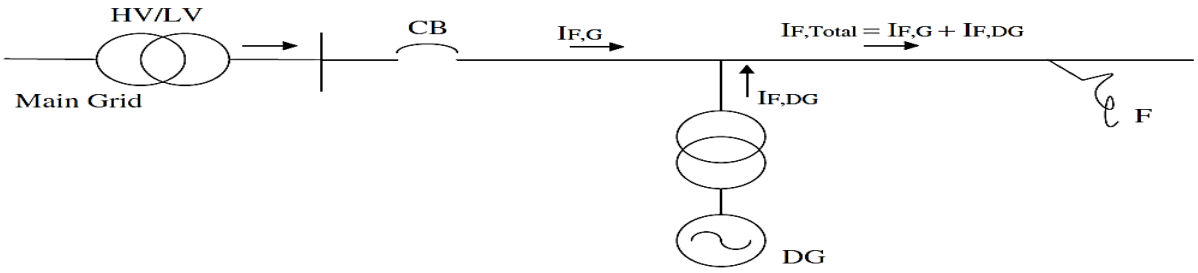

Figure 1 Fault current contributions from system and DG

2.2 Device Discrimination

In traditional systems that have a generation source at one end of the network, as the distance of the fault point from the source increases, the fault current decreases [9].This is due to the increase in the impedance being proportional to the distance from the source. This phenomenon is used for discrimination of devices that use fault current magnitude. But in the case of an islanded microgrid with IIDG units, as the maximum fault current is limited, so the fault level at locations along the feeder will be almost constant. Hence, the traditional current-based discrimination strategies would not work.

2.3 Reduction in Reach of Impedance Relays

This maximum distance corresponds to a maximum fault impedance or a minimum fault current that is detected [3]. In the case of a fault that occurs downstream of the bus where DG is connected to the utility network, the impedance measured by an upstream relay will be higher than the real fault impedance (as seen from the relay). This is equivalent to an apparently increased fault distance and is due to increased voltage resulting from an additional in feed at the common bus. As a consequence, this will affect the grading of relays and will cause delayed triggering or no triggering at all, as shown in Figure 2. This phenomenon is defined as under-reaching of a relay.

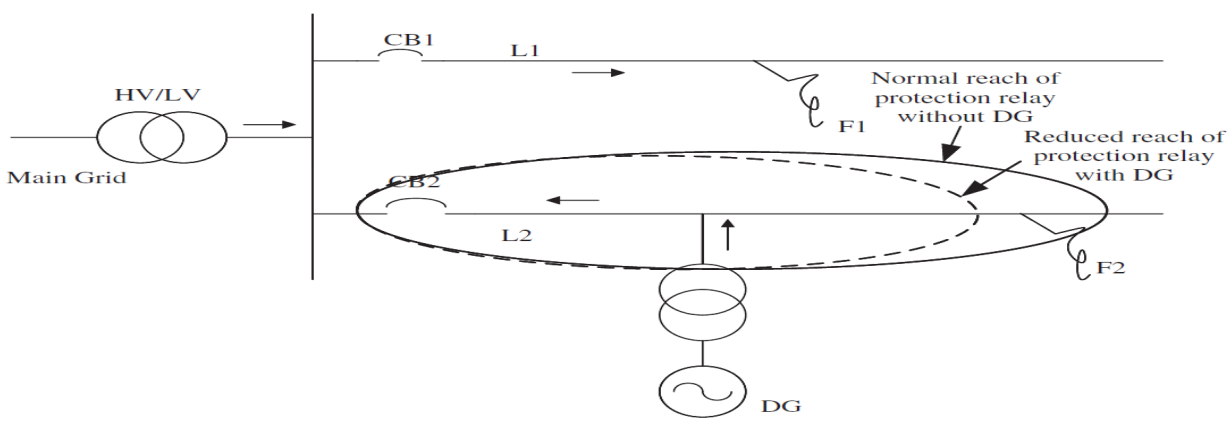

Figure 2 Under-reaching of relay and sympathetic tripping fault scenario caused by DG connection

2.4 Bidirectionality and Voltage Profile Change

The power flow changes its direction in the case of DNs with embedded DG when local generation exceeds the local consumption [1, 2]. The reverse power flow may hinder the working of directional relays as, traditionally, radial DNs are designed for unidirectional power flow. Moreover, reverse power flow also means a reverse voltage gradient along a radial feeder. This can cause power quality problems, result in violation of voltage limits, and cause increased equipment voltage stress.

DG can also have an impact on the role of tap changing transformers for voltage regulation in DNs. If the location of the DG is close to the network in feed, it affects the tap changing by reducing the load for the transformer. As a result of a shift in tap changing characteristics, the regulation of in feed voltage will be incorrect [2, 3].Moreover, transformer configuration and grounding arrangements selected for DG connection to the grid must be compatible with the grid, to save the system from voltage swells and overvoltage, and consequent damage [2].

2.5 Sympathetic Tripping

This phenomenon can occur due to unnecessary operation of a protective device for faults in an outside zone, that is, a zone that is outside its jurisdiction of operation[3–8]. An unexpected contribution from DG can lead to a situation when a bidirectional relay operates along with another relay which actually sees the fault, thus resulting in malfunctioning of the protection scheme.

2.6 Islanding

DG can create severe problems when a part of a DN with a DG unit is islanded. This phenomenon is described as loss of mains (LOM) or loss of grid (LOG). In the case of LOM, the utility supply neither controls the voltage nor the frequency. In most cases, islanding is due to a fault in the network. If the embedded generator continues supplying power despite the disconnection of the utility, a fault might persist as it will be fed by a DG [2–8]. The voltage magnitude gets out of control in an islanded network as most of the small embedded generators and grid interfaces are not equipped with voltage control.

2.7 Effect on Feeder Reclosure

in the case of a DN with DG, two main problems may result from automatic reconnection of the utility after a short interval [2–8]. The first problem is that the automatic recloser attempt may fail as a result of feeding of a fault from a DG. The second problem is that due to active power imbalance, a change in frequency may occur in the islanded part of the grid. In this scenario, an attempt at reclosing the switch would couple two asynchronously operating systems. Moreover, conventional reclosers are designed to reconnect the circuit only if the substation side is energized and the opposite side is unenergized. However, in the case of DG, there would be active sources on both sides of their closer, thus hampering it's working.

3 Possible Solutions to Key Protection Challenges

There are several possible solutions to cope with the new challenges caused by introduction of DG into DNs. To solve the problem of bidirectionality, the main relays of the feeders which are fed from the same substation can be interlocked [6]. The main relay of the feeder with DG will be equipped with the interlocking system. Once a short circuit is detected by a relay, it will send a locking signal to the main relay of the feeder having DG. Due to this locking signal, the main relay will not maloperate, even if there is back feeding from the DG to the fault. The use of directional OC relays instead of OC relays can also solve this problem, but this scheme has it own limitations, as mentioned earlier. Main feeder's relays readjustment in terms of time settings is another solution. The feeder without DG can have faster relay settings than the relay settings of the feeder with DG [6]. But care has to be taken with this readjustment so that it does not hinder the coordination of these relays with downstream protection devices of the feeder.

Generally, disconnection of the DG from the network (by means of interconnect protection) is ensured before reclosing the feeder breaker. Use of a communication channel between a substation and the DG to transfer trip a DG unit can ensure fast reconnection. In cases where DG is allowed to carry islanded loads, a syn-check relay on the circuit breaker or recloser that coordinates synchronization with the grid can be used to reclose the feeder breaker [8].There is a trade-off between the speed of reclosing and the power quality, that is, the faster the reclosing, the better the power quality. However, to ensure that the reclosing attempt is successful, instantaneous reclosing is not recommended for feeders with DG. Increase of the reclose interval from the usual 0.3 s to 1 s is recommended for such feeders [3, 8].

3.1 Possible Solutions to Key Protection Challenges for an Islanded Microgrid Having IIDG Units

Conventional protection schemes face serious challenges when it comes to protecting an islanded microgrid with IIDG units. The various possible solutions to cope with the problem can be broadly divided into four

categories: use of inverters having high fault current capability, that is, uprating of the inverter [10]; communication between the inverter and protective relays; introduction of energy storage devices that are capable of supplying large current in case of a fault[11]; and in-depth analysis of the fault behavior of an islanded microgrid with an IIDG unit to comprehend the behavior of system voltages and currents [12, 13]. This will in turn help in defining alternative fault detection and alternative protection strategies that, in case of a fault, do not rely on a large magnitude of the fault current but rely on other parameters, like change in the voltage of the system [14].

3.1.1 Differential Protection Schemes

In [15], the authors have proposed the application of a differential protection scheme, which is traditionally used for transformer protection, for the protection of an islanded microgrid. This scheme based on differential relays is selected as its operation, unlike OC relays, is independent of the fault current magnitude. This scheme solves the problem of low fault current in the case of IIDG, but it has a downside, too. The protection scheme would not be able to differentiate between a fault current and an overload current, so nuisance tripping will result whenever the system is overloaded. So, traditional differential protection schemes might not be, in some instances, able to differentiate correctly between internal faults and other abnormal conditions. Also mismatch of the current transformers can be a source of malfunction.

For a coordinated clearing of a fault in an islanded microgrid and to ensure selectivity, it is important that different distributed generators can communicate effectively with each other. To this end, evolving a distribution system version of the pilot wire line differential protection may be needed [7].

3.1.2 A Balanced Combination of Different Types of DG Units for Grid Connection

Another way to ensure the proper protection of an isolated micro grid is to use DGunits with synchronous generators, or to use inverters having high fault current capability, or to use a combination of both types of DG unit, so that conventional protection schemes can be properly used. This combination will ensure a large fault current that can be detected by conventional protection schemes. However, for a higher rated inverter, large size power electronic switches, inductors, and capacitors, etc, would be needed, thus making the system expensive. Energy storage devices, like batteries and flywheels, can also be incorporated into the microgrids to increase the fault level toa desired level. In the case of low voltage circuits, the fault current should be at least three times greater than the maximum load current for its clearance by OC relays [7].

Directional relays can be used to clear the fault within the microgrid provided they see a fault current exceeding the maximum load current in their tripping direction. But this is not always the case as faults can be fed from different directions

10.3.1.3 Inverter Controller Design

A protection scheme for an islanded microgrid is heavily dependent on the type ofthe inverter controller as the controller actively limits the available fault current from an IIDG unit. This has been demonstrated in [13, 16] where two different controllers, that is, one using “dq0” coordinates and the other using three-phase (*abc*) coordinates,

are employed to control a stand-alone four leg inverter supplying a microgrid. In both cases, the fault current is quite small but its magnitude is different. Thus, selection ofa controller can be important for microgrid protection.

3.1.4 Voltage-Based Detection Techniques

A protection scheme that combines conventional OC characteristics and under voltage initiated directional fault detection with definite time delays is proposed in [9]. A large depression in network voltage cannot be used alone for detecting low levels of fault current in a microgrid as voltage depression would not have sufficient gradient to discriminate the protection devices. Hence, measurement of some other parameters is recommended. It is mentioned in [9] that simple device discrimination can be achieved by current direction together with definite time delays. The duration of delays is proposed to be set on the basis of sensitivity of loads or generation to under voltage. For setting up adequate discrimination paths, selecting different delays for the forward and reverse direction flows of the fault current is recommended. This scheme looks sound but the use of communication channels for coordinating protection with control and automation schemes can complicate things.

The authors of [14] propose various voltage detection methods to protect networks with a low fault current. One of the suggested methods makes use of the Clarke and Park transformations [17] to transform a set of instantaneous three-phase utility voltages into a synchronously rotating two-axis coordinate system. The resultant voltage

is compared with a reference value to detect the presence of the disturbance. In the case of an unsymmetrical fault, the utility voltage “dq” components have a ripple on top of the DC term. Hence, these components are first

notch filtered and then compared with the reference. Fault detection in the case of low fault current networks canbe achieved by making use of voltage source components. It is possible to calculate the values of voltage source components for different types of faults since the theory of the interconnection of equivalent sequence networks in the event of a fault is applicable here [16].

Another voltage detection method makes use of the fact that the sum of two squared orthogonal sinusoidal waveforms is equal to a constant value [18]. The necessary 90∘phase shift is achieved by passing each phase voltage through an all-pass filter. The output is obtained by summing the squared values of the two signals for each phase and then comparing them with the reference after filtration to detect any disturbance.

The above-mentioned schemes have their limitations. The performance of the schemes can suffer due to time delays and filtering actions. The time required for detection of a fault in each case is different as it depends upon the type of the fault as well as on the magnitude of the voltage at the faulty feeder at the moment of the occurrence of the fault. Time delay is also introduced by the filtering action.

3.1.5 Adaptive Protection Schemes

Adaptive protection schemes are presented as a solution for microgrid protection both in grid-connected and in islanded mode of operation. The basic philosophy behind these schemes is automatic readjustment of the relay settings when the microgrid changes from grid-connected to islanded mode and vice versa. In an islanded microgrid,

the adaptive protection strategy can be used by assigning different trip settings for different levels of fault current, which in turn are linked to different magnitudes of system voltage drops resulting from disturbance in the system.

As discussed earlier, in an islanded microgrid with IIDG units, the fault in the system can result in severe voltage depression in the entire network (due to low impedances within the network). In such a scenario, selectivity cannot be assured using voltage measurement alone. A possible solution could be the use of a voltage restrained OC technique, as proposed in [14]. The scheme is shown in Figure 3.

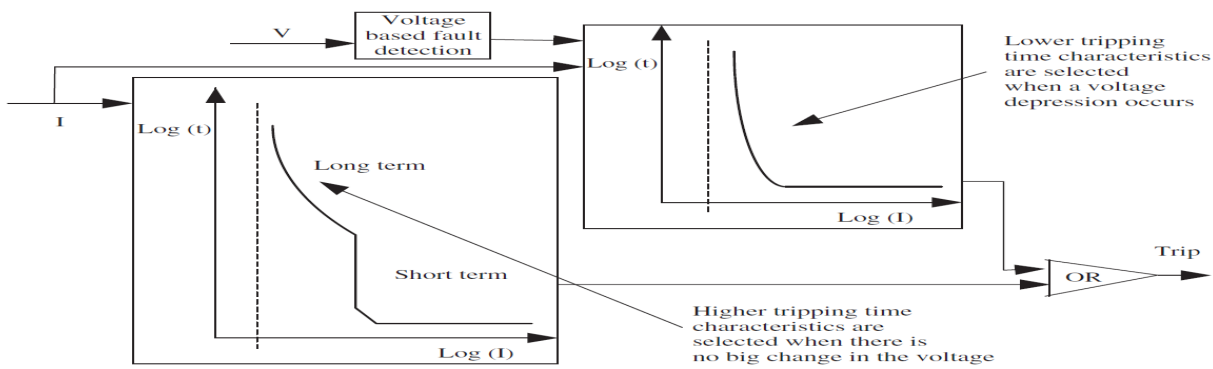

Figure 10.3 Voltage restrained overcurrent protection scheme logic circuit [14]

A large depression in voltage (which happens mostly in the case of short circuit as opposed to overload) will result in the selection of a lower current threshold. This would effectively move the time–current characteristic down and thus the tripping time would be reduced. In contrast to this, tripping times would be longer during overloads as a small voltage depression would not be able to switch the scheme to the lower setting. Thus the system would retain the longer time setting corresponding to long-term characteristics.

This scheme, although looks sound, has its drawbacks. It is not clear how the scheme will perform if there is a small difference in the magnitude of voltage depression resulting from short circuit and overload conditions. The scheme seems to make use of the principle of relays with inverse time characteristics, that is, the larger the fault current, the smaller the response time. Also, it will suffer from a long clearing time in the case of faults that cause a small voltage drop, thus posing the risk of fault current spreading in the entire network. See also Chapter 11, which discusses an adaptive fuse saving protection scheme for a grid with DG.

3.1.6 Protection Based on Symmetrical and Differential Current Components

An islanded microgrid can be protected against single line-to-ground (SLG) and line-to-line (LL) faults with a protection strategy that makes use of symmetrical current components [19]. Based on these facts, a symmetric approach for protection of a microgrid is proposed in [20]. This scheme makes use of differential and zero-sequence current components as a primary protection for SLG faults and negative-sequence current components as a primary

protection against LL faults. It is recommended that a threshold should be assigned to each of the symmetrical current components to prevent the microgrid protection from operating under imbalanced load conditions. This threshold should be selected carefully to avoid any maloperation of relays.

4 Case Study

Figure 4 shows a single line diagram of the system that is simulated to investigate the impact of DG on DN protection. A typical 25 kV DN is configured downstream of a 69/25 kV substation named as the main substation (MS). The utility grid upstream of the substation is represented by a The venin equivalent of voltage source and series impedance with short circuit level of 637MVA and an X/R ratio of 8 at 69 kV bus. The MS is equipped with a 69/25 kV, 15MVA load tap-changing transformer, with delta-wye grounded configuration. The transformer has a series equivalent impedance of 7.8% at 15MVA base and connects the DN to the 69 kV sub-transmission system.

The DN is modeled by two load feeders, LF1 and LF2 in Figure 10.4, emanating from the 25 kV bus. The system load – 10MW on each feeder – is modeled as a constant impedance that has no contribution to the fault. Two equivalent synchronous generators rated at 18MVA are connected to the 25 kV bus through two 0.66/25 kV, 18MVAstep-up transformers – with delta-wye grounded configuration – and through two 25 kV collector feeders, CF1 and CF2 in Figure 4.

The positive sequence impedance for 25 kV feeders is 0.2138+j0.2880Ωkm–1 and for a 69 kV feeder it is 0.2767+j0.5673Ωkm–1. The zero sequence impedance for the 69 kV sub-transmission line (Sub-TL) is 0.5509+j1.4514.

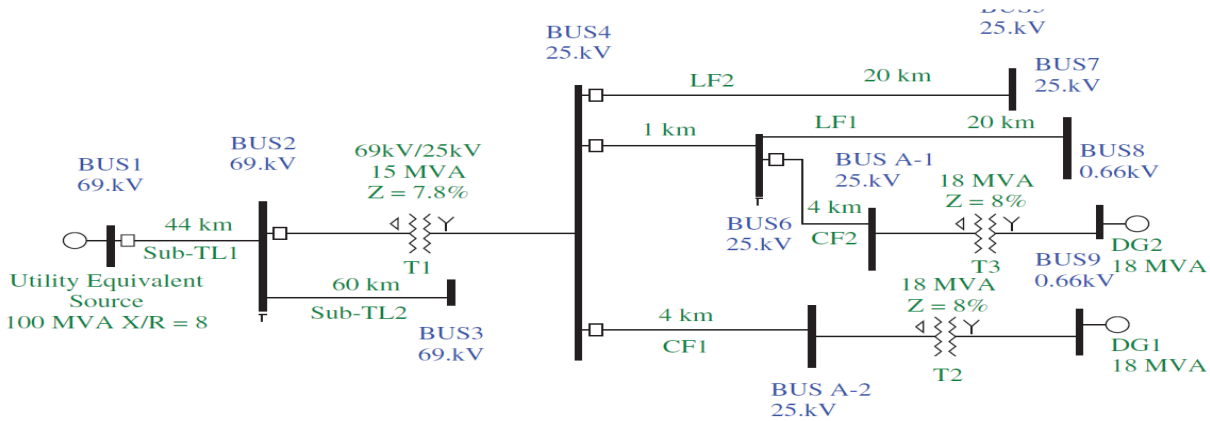

Figure 4 Single line diagram of a typical distribution network (DN) with distributed generation (DG) where sub-TL stands for sub-transmission line, CF and LF represent collector feeder and load feeder, respectively

A distance relay (SEL 321) is installed at the bus 1 end of the Sub-TL1 to protect against faults at Sub-TL1 and Sub-TL2 and to provide back-up protection for some part of the DN. An OC fuse rated at 200 A is installed on the high voltage side of transformer T1 to provide protection against transformer internal faults and back-up for feeder faults. The load feeders are equipped with time-graded OC and earth fault (EF) relays (i.e., 51/51 N) and instantaneous OC and EF relays (i.e., 50/50 N) for protection against phase and ground faults. The collector feeders are also protected by OC relays. OC and the EF relays of load feeders LF1 and LF2 are set at 280 and 140A respectively. The OC relays at both the collector feeders are set at 400 A.

ASPEN One Liner was used to simulate different faults for determining short circuit levels and to investigate their impact on protection coordination, including reach of distance relays. Figure 5 shows the time–current characteristic curve of the fuse installed at the high voltage side of the MS transformer and the OC relays installed at the load feeders. The operating times that are shown on the curve are of the fuse and OC relays of the load feeders in the case of a three-phase to ground (3LG) fault at 90% of the LF1 length.

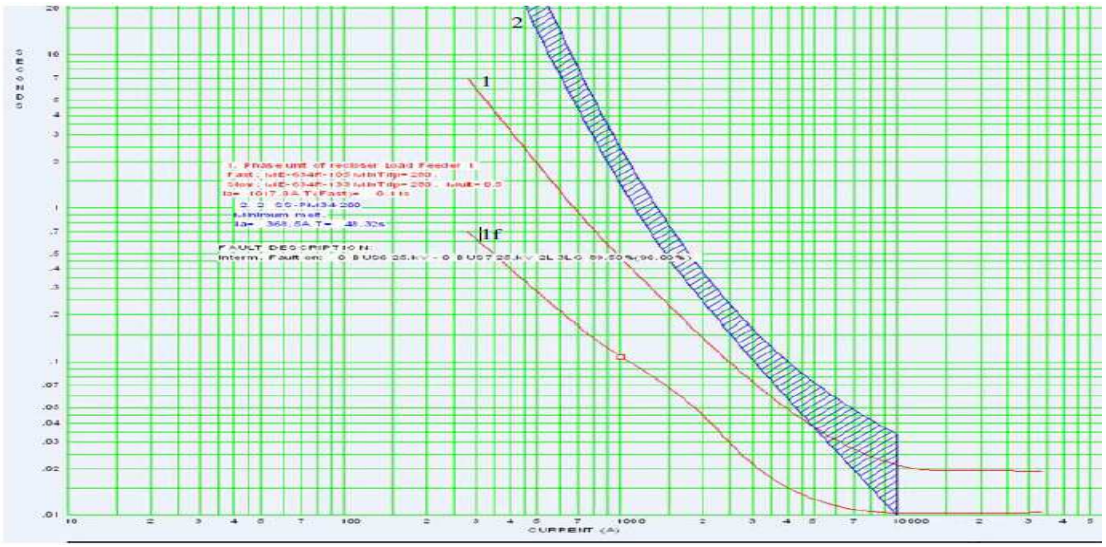

Figure 5 Operating times of OC relay installed at LF1 and fuse located at high voltage side of substation transformer for 3LG fault at 90% of LF1 length without DG. '1f' and '1'stand for the recloser's fast and slow characteristics curves respectively while '2' represents the fuse characteristics curve.

4.1 Fault Level Modification

A 3LG fault was applied to determine the fault current at different points with and without DG connection, as shown in Table 10.1. It is clear from the table that after introduction of DG, the fault current has increased by 28.5% at bus 2, by 51% at bus 4, and by 22.8% in the case of a fault at the end of LF1.

Table 1 Fault currents at different network buses with and without DG

Fault current (A)					
Without DG while three phase to ground fault is at			With DG while three phase to ground fault is at		
Bus 2	Bus 4	End of LF1	Bus 2	Bus 4	End of LF1
1147	1874	967	1605	3826	1252

4.2 Blinding of Protection

Operation of a feeder OC relay may be disturbed in the presence of DG. Although DG increases the fault levels, the fault current seen by the feeder OC relay decreases due to the DG contribution in situations when DG is located between the fault point and the feeding station, as shown in Figure 6. This can result in delayed tripping of the feeder relay or, in a worst case scenario, no tripping at all. It is clear from Table 2, in the case of a 3LG fault at 90% of feeder length, the OC relay at LF1 operated in 0.23 s when no DG was connected and the same relay operated in 0.29 s when only DG2 was connected or when both DG units were connected.

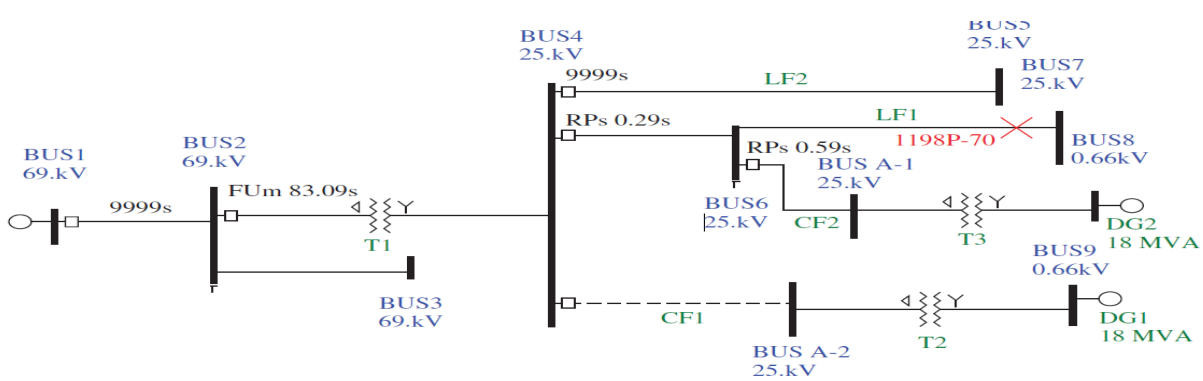

Figure 6 Blinding of protection or delayed tripping scenario in the case of a 3LG fault at 90% of LF1 length with DG2 connection only

Table 10.2 Operating times of protection devices in the case of a 3LG fault at 90% of the LF1 length (N/O stands for no operation and DR stands for distance relay)

Operating time (s)					Configuration of DN
OC relay at CF 2	OC relay at CF 1	OC relay at LF1	Fuse	DR (Zone 3)	
N/O	N/O	.23	48.32	N/O	**Without DG**
N/O	.58	.18	79.85	N/O	**With DG 1**
.59	N/O	.29	82.09	N/O	**With DG 2**
.9	.89	.29	64	N/O	**With both DGs**

4.3 Sympathetic Tripping

Sometimes DG can contribute to a fault on a feeder fed from the same substation or even to a fault at higher voltage levels, resulting in unnecessary isolation of a healthy feeder or a DG unit. For example, an OC relay at CF1 can unnecessarily operate for a high resistive 3LG fault at LF1 as a result of infeed to the fault from DG1 through the substation bus bar, as shown in Figure 7.

4.4 Reduction in Reach of Distance Relay

Distance relays are set to operate in a specific time for any faults occurring within a predefined zone of a transmission line or a distribution feeder. Due to the presence of DG, a distance relay may not operate according to its defined zone settings. When a fault occurs downstream of the bus where DG is connected to the utility, impedance measured by an upstream relay will be higher than the real fault impedance.This can disturb the relay zone settings and can, thus, result either in delayed operation or, in some cases, no operation at all.

Table 3 shows the zone settings for the distance relay installed at the Sub-TL 1 (shown in Figure 4). It is clear from the table that the range of zone 2 decreases to 67% when DG is connected from 79% when DG was not connected. Similarly, thereach of zone 3 is reduced to 91% with DG from its previous value of 100% when DG was not connected. Zone 2 under-reach is also shown in Figure 8.

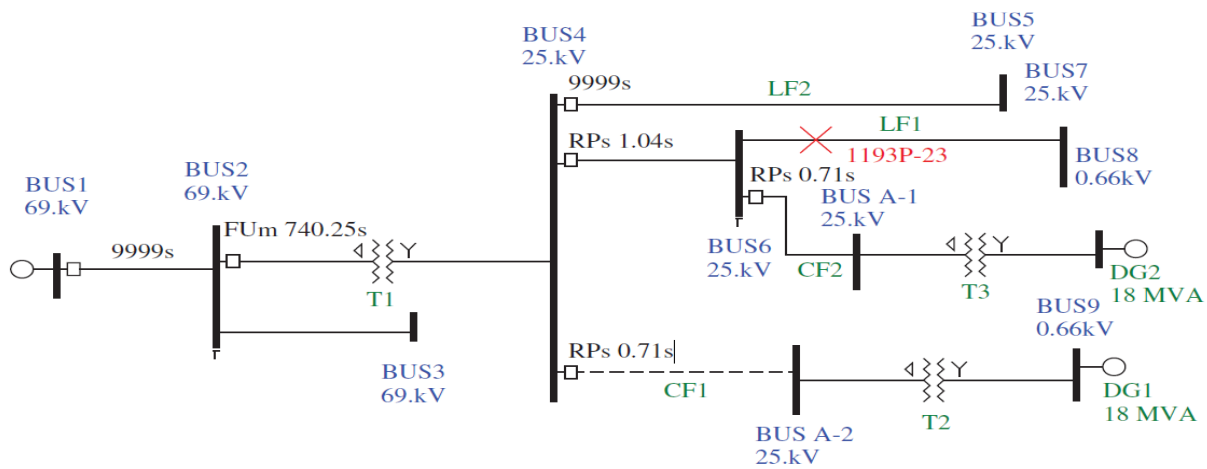

Figure 7 Sympathetic tripping scenario when relay at CF1 opens for a high resistive 3LG fault at 30% of LF1 length with both DG connected

Table 3 Operating zones of distance relay with and without DG

Distance relay operating range				Relay settings (% of line length)	zones
One-phase fault		Three-phase fault			
With DG	Without DG	With DG	Without DG		
39	39	40	40	40	**Zone 1**
74	79	67	79	80	**Zone2**
100	100	91	100	115	**Zone3**

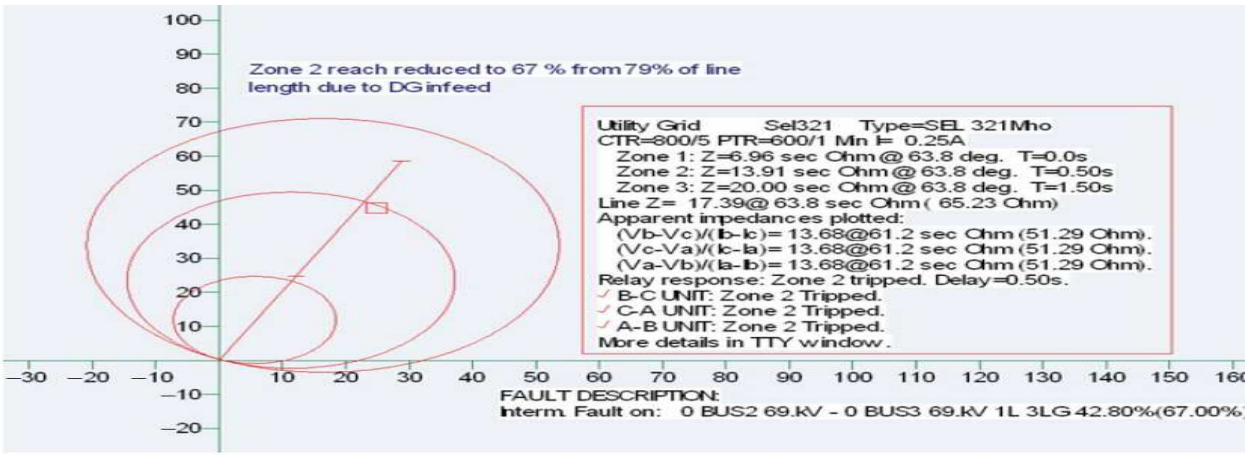

Figure 8 Distance relay zone settings and effect of DG on Zone 2 reach

5 Conclusions

Different protection issues caused by integration of DG into DNs have been discussed. By making use of a simulation model of a typical DN, different fault scenarios with and without DG, have been simulated and the behavior of an existing protectionset-up has been examined. The results show that DG integration can change the FCL and, consequently, coordination of protection devices. Nuisance tripping of relays can also occur. Distance relays can under-reach as a result of fault current infeed from DG. All these issues should be addressed in order to ensure that protection of the system remains reliable even after introduction of DG. Various protection schemes for microgrids, both in grid-connected and islanded mode of operation, are explored. The techniques and strategies, such as analysis of current using digital signal processing for characteristic signatures of faults, development of a real-time fault location technique having the capability to determine the exact fault location in all situations, use of impedance methods, zero sequence current and/or voltage detection-based relaying, and differential methods using current and voltage parameters], have the potential for developing more robust protection schemes to cope with the new challenges.

REFERENCES

1. Jenkins, N., Allan, R., Crossley, P. *et al*. (2000) *Embedded Generation*, IEE Power and Energy Series, vol. 31, IEE Press, London.

2. Barker, P.P. and De Mello, R.W. (2000) Determining the impact of distributed generation on power system: part 1 – radial distribution systems. *IEEE Power Engineering Society*, **3**, 1645–1656.

3. Geidl, M. (2005) Protection of Power Systems with Distributed Generation: State of the Art, Power Systems Laboratory, ETH Zurich.

4. Maki, K. S. Repo, and P. Jarventausta (2004) Effect of wind power based distributed generation on protection of distribution network. 8th International Conference on Developments in Power System Protection, pp. 327–330.

5. EPRI (2005) Distribution System Design for Strategic Use of Distributed Generation, EPRI, Palo Alto, CA.

6. Abdel-Galil, T.K., Abu-Elnien, A.E.B., El-saadany, E.F., *et al*. (2007) Protection Coordination Planning WithDistributed Generation. Report Number -CETC 2007-49. QualsysEngco. Inc..

7. Feero, W.E., Dawson, D.C., and Stevens, J. (2002) White paper on Protection Issues of The MicroGrid Concept, CERTS.

8. Power System Relaying Committee, IEEE PES (2004) The Impact of Distributed Resources on Distribution Relaying Protection.

9. Tumilty, R.M., Elders, I.M., Burt, G.M. and Mcdonald, J.R. (2007) Coordinated protection, control and automation schemes for microgrids. *International Journal of DistributedEnergy Resources*, **3**, 225–241.

10. Lopes, J.A.P., Moreira, C.L. and Madureira, A.G. (2006) Defining control strategies for microgrids Islanded operation. *IEEE Transactions on Power Systems*, **21** (2), 916–924.

11. Jayawarna, N., Jenkins, N., Barnes, M., *et al*. (2005) Safety analysis of a microgrid. International Conference on Future Power Systems, pp. 1–7.

12. Timbus, A.V., Rodriguez, P., Teodorescu, R. *et al*. (2006) Control strategies for distributed power generation systems operating on faulty grid. IEEE International Symposium onIndustrial Electronics, Vol. 2, pp. 1601–1607.

13. Baran, M.E. and El-Markaby, I. (2005) Fault analysis on distribution feeders with distributed generators. *IEEE Transactions on Power Systems*, **20** (4), 1757–1764.

14. Tumilty, R.M., Brucoli, M., Burt, G.M. and Green, T.C. (2006) Approaches to network protection for inverter dominated electrical distribution systems. *Power Electronics,Machines and Drives (PEMD)*, **1**, 622–626.

15. Zeineldin, H.H., El-Saadany, E.F., and Salama, M.M.A. (2006) Distributed generation micro-grid operation: control and protection. Power Systems Conference, pp. 105–111.

16. Brucoli, M. and Green, T.C. (2007) Fault behaviour in islanded microgrids. 9th International Conference on Electricity Distribution, Vienna, Austria, pp. 21–24.

17. Sannino, A. (2001) Static transfer switch: analysis of switching conditions and actual transfer time. IEEE Power Engineering Society Winter Meeting, 2001, Vol. 1, pp. 120–125.

18. Ise, T., Takami, M., and Tsuji, K. (2000) Hybrid transfer switch with fault current limiting function. Proceedings of the 9th Int. Conference on Harmonics and Quality of Power, Vol. 1, pp.189–192.

19. Bergen, A.R. (1986) *Power System Analysis*, Prentice Hall Publications.

20. Nikkhajoei, H. and Lasseter, R.H. (2006) Microgrid Fault Protection Based on Symmetrical and Differential Current Components, CEC, Public Interest Energy Research Program.

21. Kueck, J.D. and Kirby, B.J. (2003) The distribution system of the future. *The Electricity Journal*, **16** (5), 78–87.

22. Lasseter, R.H., Akhil, A.A., Marnay, C. *et al*. (2002) White Paper on Integration ofDistributed Energy Resources: The CERTS MicroGrid Concept, CERTS.